Bank of America

PROJECT DATA

PROJECT SCOPE :

1 PROVIDE A NEW DU ISL DIEBOLD 7790 ATM WITH TOP

PROJECT LOCATION:

BANK OF AMERICA
OAKLAND INDUSTRIAL CTR.
303 Hengenbereg Road
Oakland , CA 94621
PROPERTY ID:CA4-141

TENANT:

BANK OF AMERICA
101 TRYON ST.
CHARLOTTE, NC 28255

BUILDING DATA :

TYPE OF USE:	BANK
FIRE SPRINKLERS:	N/A
PROJECT OCCUPANCY:	GROUP B BUSINESS
CONSTRUCTION TYPE:	V-B / METAL FRAME WALL
STORY:	SINGLE
ZONE:	COMMERCIAL
BUILDING AREA:	8,630 SQ. FT.
WORK AREA:	030 SQ. FT.

APN #: 42-4425-17-3
LOT #: 17-3

PROJECT ARCHITECT:

JOHN DEENIHAN
5931 OAKDALE AVE,
WOODLAND HILLS, CA 91367

LICENSED ARCHITECT JOHN GILMORE DEENIHAN C-30147 REN. 8/31/2021 STATE OF CALIFORNIA

DRAWING INDEX;

T1:	COVER SHEET; DRAWING INDEX & PROJECT DATA
A0.1:	GENERAL NOTES & SPECIFIATION NOTES
A0.2:	SITE & PLOT PLAN
A0.4.1:	TITLE SHEET #4.1 - DISABLED ACCESS DETAILS
A1.1:	PLAN, ELEVATION & SECTION - EXISTING / DEMO PLAN
A2.1:	PLAN, ELEVATION & SECTION - NEW
A6.0:	ENLARGE - DRIVEWAY PATH
A12.1:	ATM SPECIFICATIONS
A12.2:	ATM SECURITY BOLT DATA
A13.1:	ATM FRAME - TOPPER

REFERENCE SHEET "A0.1" FOR A FULL CODE LIST AND NOTES

APPLICABLE CODES

-ELECTRICAL CODES	2017 NATIONAL ELECTRICAL CODE (NEC)
-CALIFORNIA CODES:	2018 CALIFORNIA CODE REGULATION (CCR)
-ELECTRICAL CODE:	2018 CALIFORNIA ELECTRICAL CODE (CEC)
-FIRE CODE:	2018 CALIFORNIA FIRE CODE (CFC)
-PLUMBING CODE:	2018 CALIFORNIA PLUMBING CODE (CPC)
-STRUCTURAL CODE:	2018 CALIFORNIA BUILDING CODE (CBE)
-MECHANICAL:	2018 CALIFORNIA MECHANICAL CODE (CMC)
-INTERN. CODE:	2018 INTERNATIONAL BUILDING CODE (IBC)
-CODE COUNCIL:	2018 INTERNATIONAL RESIDENTIAL CODE (ICC)
-PLUMBING CODE:	2018 UNIVERSAL PLUMBING CODE (UPC)
-MECHANICAL:	2018 UNIVERSAL MECHANICAL CODE (UMC)
-ENERGY CODE:	2018 INTERNATIONAL ENERGY CONSERVATION CODE (IECC)
-MUNICIPAL CODES:	CURRENTLY STATE AND LOCAL MUNICIPAL CODES AND ORDINANCES

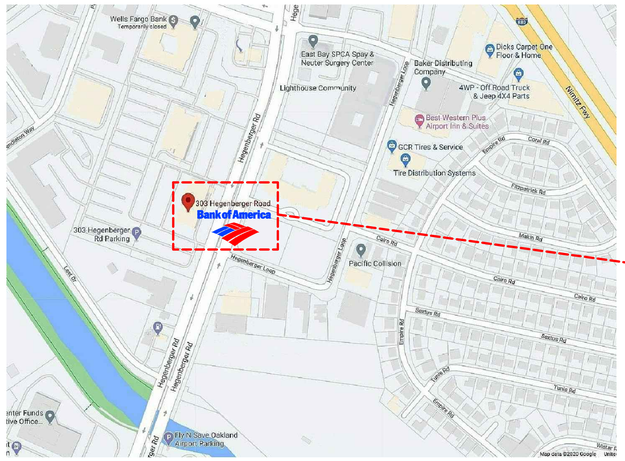

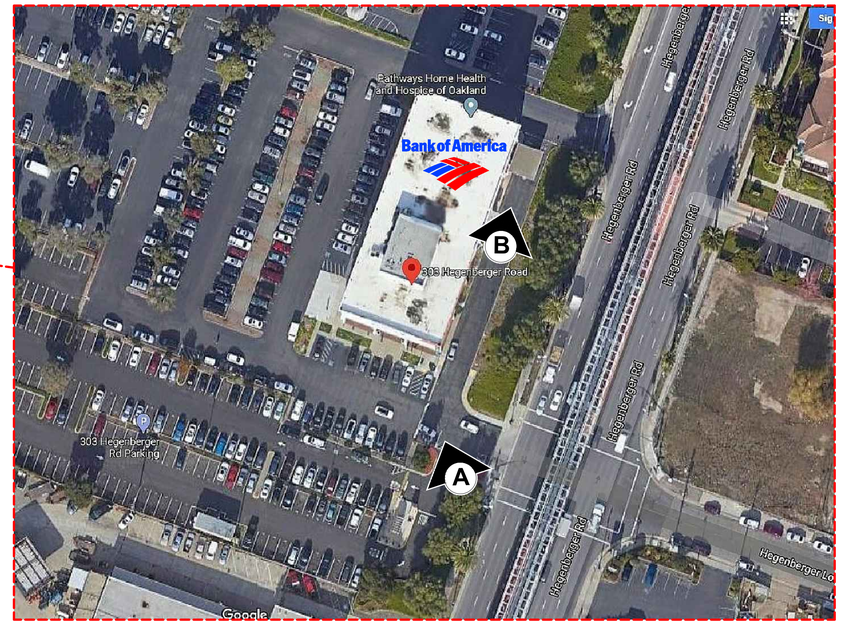

Port Permit No. 5318 **Approved January 12, 2021**

This permit to for Bank of America to install an additional exterior ATM at 303 Hegenberger Road has been approved by the Port of Oakland under its land use jurisdiction. The approval is in accordance with the Oakland Airport Business Park Land Use and Development Code, and the project complies with all standards therein.

Joe Marsh

Joe Marsh, Port Permit Coordinator

EXCEL Construction Services, Inc.
Certified WBENC Women's Business Enterprise
1950 Raymer Ave.
Fullerton, CA 92833
www.excelconstruction.biz

CA #852879
AZ #ROC238178
NV #0071254

This drawing is the confidencial property of EXCEL CONSTRUCTION SERVICES, INC. and is to be used only by authorized personnel and in the interest of the company. It must be accounted for; shall not be reproduced in whole or in part without prior written permission from EXCEL CONSTRUCTION SERVICES, INC. management, and must be returned to company at any time upon request, but in any event at the completion of the work or job. The recipient agrees to keep confidential, and to require his (its) employees to keep confidential, the information contained hereon. Disclosure of the information contained hereon shall be made only to those persons who require such information for their work on EXCEL CONSTRUCTION SERVICES, INC. projects.

Banck Of America
OAKLAND INDUSTRIAL CENTER
303 Hegenberger Road
Oakland, CA 94621
BAC Property ID: CA4-141

STAMPS SUMMARY:

ARCHITECTURAL STAMPS:

- ☐ IN PROGRESS
- ☐ APPROVED
- ☑ FOR CONSTRUCTION

CITY OF OAKLAND

ARCHITECTURAL STAMPS:

FOR CONSTRUCTION

LICENSED ARCHITECT JOHN GILMORE DEENIHAN C-30147 REN. 8/31/2021 STATE OF CALIFORNIA

FOR CONSTRUCTION

FOR CONSTRUCTION

MARK	DESCRIPTION	DATE
8	-	-
7	-	-
6	-	-
5	-	-
4	-	-
3	-	-
2	-	-
1	CHANGE ATM NCR-6688 TO DIEBOLD-7790	08-27-20

EXTERNAL REFERENCES:

PROJECT NAME:	PROPERTY ID:
BAC CAP OAKLAND IND.CTR. DRIVE UP ISLAND ATM	#: CA2-121

DRAWING DESCRIPTION:

COVER SHEET; DRAWING INDEX AND PROJECT DATA

NEW ATM MODEL

1 DU ISL DIEBOLD 7790 ATM WITH TOP

PROJECT No.:	19-1231	SHEET No.:	T1
DATE:	APRIL 25, 2020		
SCALE:	AS NOTED		
PROJECT MANAGER:	JR		
DRAWN BY:	FJL		
CHECKED BY:	JR	SHEET No.:	01 OF 09

GENERAL NOTES AND SPECIFICATIONS

GENERAL NOTES;

1. ALL WORK SHALL CONFORM TO THE REQUIREMENTS OF THE LATESTS EDITION OF THE CLVO, 2018 IBC, 2017 NEC, 2018 UMC, 2018 UPC, 2018 IRC, 2018 IECC, 2018 ICC A117.1 AND ALL OTHER APPLICABLE REQUIREMENTS OF LOCAL AND STATE CODES, ORDERS, ORDINANCES AND REGULATIONS.

2. CONTRACTOR TO PROVIDE EQUIPMENT TO ENSURE LIFE SAFETY OF PUBLIC, TENANTS AND WORKERS AS REQUIRED BY FEDERAL, STATE AND LOCAL CODES THROUGHOUT CONSTRUCTION. CONTRACTOR SHALL TAKE ALL NECESSARY MEASURES TO PROTECT PEDESTRIANS PER CHAPTER 33 OF THE UBC

STORM WATER QUALITY NOTES;

1. THE PROJECT SHALL COMPLY WITH ALL CURRENT REQUIREMENTS OF THE STATE PERMIT; CALIFORNIA REGIONAL WATER QUALITY CONTROL, TRACY MUNICIPAL STORM WATER CODE AND THE CITY OF TRACY DEVELOPMENT CODE. THE STORM WATER NOTES BELOW REPRESENT KEY MINIMUM REQUIREMENTS FOR CONSTRUCTION STANDARDS.

2. THE CONTRACTOR SHALL BE RESPONSIBLE FOR CLEANUP OF ALL SILT AND MUD ON ADJACENT STREET(S), DUE TO CONSTRUCTION VEHICLES OR ANY OTHER CONSTRUCTION ACTIVITY AT THE END OF EACH WORK DAY, OR AFTER THE STORM EVENT THAT CAUSES A BREECH IN INSTALLED CONSTRUCTION BMP'S WHICH MAY COMPROMISE STORM WATER QUALITY WITHIN ANY STREET(S)A STABILIZED CONSTRUCTION EXIT MAY BE REQUIRED TO PREVENT CONSTRUCTION VEHICLES EQUIPMENT FROM TRACKING MUD OR SILT ONTO THE STREET.

3. ALL STOCKPILES OF SOIL AND/OR BUILDING MATERIALS THAT ARE INTENDED TO BE LEFT FOR A PERIOD GREATER THAN SEVEN CALENDAR DAYS ARE TO BE COVERED.ALL REMOVABLE BMP DEVICES SHALL BE IN PLACE AT THE END OF EACH WORKING DAY WHEN FIVE DAY RAIN PROBABILITY FORECAST EXCEED 40%

4. A CONCRETE WASHOUT SHALL BE PROVIDED ON ALL PROJECTS WITH PROPOSE THE CONSTRUCTION OF ANY CONCRETE IMPROVEMENTS WHICH ARE TO BE POURED IN PLACE ON SITE. TO WORKING ORDER AFTER EACH RUN-OFF PRODUCING RAINFALL OR AFTER ANY MATERIAL BREACH IN EFFECTIVENESS. MUST BE PROTECTED AGAINST EROSION AND SEDIMENT TRANSPORT AT ALL TIME. BE PROTECTED AGAINST ANY POTENTIAL RELEASE OF POLLUTANTS INTO THE ENVIRONMENT.

5. THE CONTRACTOR SHALL RESTORE ALL EROSION/SEDIMENT CONTROL DEVICES.

6. ALL SLOPES THAT ARE CREATED OR DISTURBED BY CONSTRUCTION ACTIVITY.

FIRE NOTES

1. LOCATIONS AND CLASSIFICATIONS OF EXTINGUISHERS SHALL BE IN ACCORDANCE WITH CFC AND CALIFORNIA CODE OF REGULATIONS (CCR) TITLE 19.

2. DURING CONSTRUCTION, AT LEAST ONE EXTINGUISHER SHALL BE PROVIDED ON EACH FLOOR LEVEL AT EACH STAIRWAY, IN ALL STORAGE AND CONSTRUCTION SHED, IN LOCATIONS WHERE OTHER SPECIAL HAZARDS ARE PRESENT PER CFC SECTION 3315.

3. ADDRESS IDENTIFICATION SHALL BE PROVIDED FOR ALL NEW AND EXISTING BUILDINGS IN A LOCATION THAT IS PLAINLY VISIBLE AND LEGIBLE FROM STREET OR ROAD FRONTING THE PROPERTY. WHERE ACCESS IS BY WAY OF A PRIVATE ROAD AND THE BUILDING ACCESS CANNOT BE VIEWED FROM THE PUBLIC WAY, AND IDENTIFICATION SHALL CONFIRM TO CFC SECTION 501.2 CFC 505.

4. EXITS, EXIT SIGN, FIRE ALARM PANELS, HOSE CABINETS, FIRE EXTINGUISHER LOCATIONS, AND STANDPIPE CONNECTIONS SHALL NOT BE CONCEALED BY CURTAINS, MIRRORS, OR OTHER DECORATIVE MATERIAL.

5. OPEN FLAMES, FIRE, AND BURNING ON ALL PREMISES IS PROHIBITED EXCEPT AS SPECIFICALLY PERMITTED BY THE CITY OF OAKLAND AND CFC 308.

6. THE EGRESS PATH SHALL REMAIN FREE AND CLEAR OF ALL OBSTRUCTION AT ALL TIMES. NOT STORAGE IS PERMITTED IN ANY EGRESS PATH.

7. ALL EXITS SHALL BE OPERABLE FROM INSIDE WITHOUT THE USE OF A KEY, SPECIAL EFFORT OR KNOWLEDGE, AND SHALL HAVE CLEARLY VISIBLE ILLUMINATED EXIT SIGNS REQUIRED BY THE FIRE DEPARTMENT. ALL REQUIRED EXIT DOORS TO REMAIN UNLOCKED DURING BUSINESS HOURS

8. ALL REQUIRED EXIT WAYS SHALL REMAIN UNOBSTRUCTED, BE CLEARLY MARKED, & MAINTAINED IN CONFORMANCE WITH THE UNIFORM FIRE CODE THROUGHOUT CONSTRUCTION. AISLES LEADING TO GET EXIT WAYS, EXIT CORRIDORS AND PATH TO PUBLIC WAY SHALL BE A MIN. OF 44 INCHES WIDE.

9. EXITS SHALL BE ILLUMINATED ANY TIME THE BUILDING IS OCCUPIED TO NOT LESS THAN 1 FOOT CANDLE AT THE FLOOR LEVEL. WHERE REQUIRED, THIS POWER SUPPLY SHALL BE PROVIDED BY TWO SEPARATE CIRCUITS OF THE NORMAL PREMISES WIRING SYSTEM, OR IN THE EVENT OF ITS FAILURE, SHALL BE AUTOMATICALLY PROVIDED FROM AN EMERGENCY SYSTEM.

10. WHERE REQUIRED, EXIT SIGNS SHALL BE SELF-LUMINOUS OR POWERED BY SEPARATED CIRCUITS SIMILAR TO EXIT ILLUMINATION.

11. EXIT SIGN LETTERS TO BE A MINIMUM 6 INCHES HIGH WITH 3/4 INCH STROKE WIDTH ON A CONTRASTING BACKGROUND. PROVIDE SIGNS IN LOCATIONS AS DETERMINED BY FIRE DEPARTMENT.

12. EXIT DOORS SHALL SWING IN THE DIRECTION OF EXIT TRAVEL WHEN SERVING AN OCCUPANT LOAD OF 50 OR MORE. OCCUPANT LOAD TO BE DETERMINED PER 2016 CALIFORNIA BUILDING CODE.

13. ALL EXISTING FIRE PROTECTION SYSTEMS SHALL BE MAINTAINED OPERATIONAL AT ALL TIMES THROUGHOUT CONSTRUCTION. IF A PORTION OF THE SYSTEM REQUIRES MODIFICATION, THE REMAINDER OF THE SYSTEM SHALL BE KEPT IN SERVICE.

14. MODIFY, OR ADD, EXISTING FIRE PROTECTION SYSTEMS AS REQUIRED BY ANY REMODEL WORK TO CONFORM TO CURRENT CODE REQUIREMENTS.

15. PROVIDE NEW AND RELOCATED EXISTING SMOKE DETECTORS AS REQUIRED BY CURRENT CODE REQUIREMENTS. VERIFY GOOD WORKING ORDER OF EXISTING SMOKE DETECTORS, AND REPAIR OR REPLACE IF REQUIRED. PROVIDE, IF NOT PRESENTLY SO, DECAL 6' X 6', WHITE "INTERNATIONAL SYMBOL OF ACCESS" ON BLUE BACKGROUND ON ALL ACCESSIBLE MAIN ENTRY DOORS.

16. PROVIDE AND LOCATE THE TYPE AND NUMBER OF PORTABLE FIRE EXTINGUISHERS AS REQUIRED BY THE FIRE DEPARTMENT THROUGHOUT CONSTRUCTION.IF PUBLIC TELEPHONES OR DRINKING FOUNTAINS ARE PROVIDED, THEY SHALL CONFORM WITH THE ACCESSIBILITY REQUIREMENTS OF THE A.D.A. AND TITLE 24

17. ALL INTERIOR WALLS AND CEILING FINISHES SHALL COMPLY WITH THE REQUIREMENTS OF THE FIRE RESISTIVE STANDARDS FOR FIRE PROTECTION, OF THE 2016 CALIFORNIA FIRE CODE: ENCLOSED VERTICAL EXIT WAYS-CLASS I, FLAME-SPREAD INDEX 0-25 EXIT CORRIDORS-CLASS II, INDEX 26-75, & OTHER ROOMS-CLASS III, INDEX 76-200.

18. INSTALL APPROVED FIRE DAMPERS WHERE DUCTS PASS THROUGH FIRE RATED PARTITIONS OR CEILINGS.

19. ALL INSULATION SHALL BE INCOMBUSTIBLE.

SPECIFICATIONS NOTES;

1. STEEL FURRING: SHALL COMPLY WITH THE CALIFORNIA BUILDING CODE AND THE FOLLOWING;
   - 1.1. RUNNER TRACKS AND STUDS SHALL BE FORMED OF 25 GAGE GALVANIZED STEEL CONFORMING TO A.I.S.I - GENERAL, A.I.S.I - N.A.S.
   - 1.2. FURRING CHANNELS SHALL BE FORMED OF NOT LESS THAN 25 GAGE GALVANIZED STEEL CONFORMING TO A.I.S.I. - N.A.S. THEY SHALL BE (HAT) SHAPED WITH FACE OF CHANNEL NOT LESS THAN 1-1/4 INCH WIDE TO RECEIVE GYPSUM WALLBOARD. THE FURRING CHANNEL SHALL BE NOT LESS THAN 7 /8 INCHES DEEP AND 2-3/4 INCHES WIDE.
   - 1.3. RUNNER TRACKS SECURED TO CONCRETE: FLOOR RUNNERS SHALL BE SECURED NOT TO EXCEED 24 INCHES O.C (U.N.O.) WITH RAMSET CAT.#3300 3/8 INCH DIA. POWER DRIVEN ANCHORS, 1-1/2 INCH MIN. PENETRATION.
   - 1.4. RUNNER TRACKS SECURED TO WOOD: USE SUITABLE SCREW TO PROVIDE 1INCH MIN. PENETRATION OR NAILS TO PROVIDE 1 - 1 / 2 INCH PENETRATION.
   - 1.5. RUNNER TRACKS SECURED TO SUSPEND CEILINGS: USE (MOLLY) TYPE EXPANDABLE FASTENERS, TOGGLE BOLTS, OR SCREWS INTO MAIN RUNNERS, FURRING CHANNELS, SPLINES, OR (TEE) BARS.
   - 1.6. STEEL STUDS SHALL BE INSTALLED PER MANUFACTURES' AND BUILDING CODE REQUIREMENTS (STRICTER REQUIREMENT SHALL TAKE PRECEDENCE).
   - 1.7. INTERIOR STEEL STUD WALLS SHALL BE 20 GA. METAL STUDS AT 16 INCHES O.C. (U.N.O) PROVIDE BLOCKING AT FLOORS, CEILINGS AND AT MID-HEIGHT. SEE PLAN FOR STD SIZE.
   - 1.8. ALL MANUFACTURED CONNECTORS SHALL HAVE ICC-ES APPROVAL.

2. PAINTING: FURNISH ND INSTALL PAINTING AS INDICATED ON THE DRAWINGS AND AS FOLLOWS;
   - 2.1. ALL PAINTING TO MATCH EXISTING.
   - 2.2. REPAINT ADJACENT WALLS WHERE REQUIRED TO END PAINT TRANSITION TO A CORNER OR NEAREST VERTICAL BREAK LINE.
   - 2.3. ALL SURFACES TO INDICATED TO BE PAINTED ARE TO BE THOROUGHLY CLEANED AND PREPARED FOR PAINTING.
   - 2.4. EXTERIOR AND INTERIOR - DRYWALL, PLASTER, WOOD, CONCRETE, OR MASONRY: ONE COAT OF SEALER; ONE COAT OF UNDERCOAT; AND TWO COATS OF PAINT AS INDICATED ON PLANS.
   - 2.5. SUBMIT COLOR SAMPLES TO ARCHITECT FOR APPROVAL PRIOR TO MATERIAL PURCHASE

3. INSTALLATION OF THE WALLBOARD: SHALL COMPLY TO THE REQUIREMENTS OF THE CALIFORNIA BUILDING CODE AND GYPSUM ASSOCIATION PUBLICATION GA-216-87 AND AS FOLLOWS;
   - 3.1. INTERIOR WALLBOARD SHALL BE 5/8 THICK TYPE 'X' FIRE RATED (FIRE CODE C) PER ASTM C-36 OR TYPE 'X' WTER RESISTANT GYP.BD. PER ASTM C-630.
   - 3.2. CONSTRUCTION TOLERANCES: GENERALLY, GYPSUM BOARD SURFACES TO HAVE NO MEASURABLE VARIATION IN ANY 2-FOOT DIRECTION AND A MAXIMUM VARIATION OF 1 / 8 INCH IN 10 FEET WHEN A STRAIGHTEDGE IS LAID ON THE SURFACE IN ANY DIRECTION.
   - 3.3. FASTENERS: PROVIDE AS PER CODES WITH MINIMUM PHILIPS HEAD WITH A BUGLE SHAPE, TYPE S, CONFORMING TO ASTM C646.
   - 3.4. PROVIDE METAL REINFORCEMENTS AND CASTING AT EDGES 25 GAUGE MINIMUM GALVANIZED METAL.
   - 3.5. PROVIDE ALL TAPING AND JOINT COMPOUNDS PER MANUFACTURER REQUIREMENTS.

4. SUSPEND ACOUSTICAL CEILING SYSTEM: NEW TILE AND SUSPENSION SYSTEM GRID SHALL MATCH EXISTING, AND NEW CONSTRUCTION SHALL BE AS SPECIFIED ON THE REFLECTED CEILING PLAN.
   - 4.1. SUSPENSION WIRES TO BE NO.12 GA. AT 4 FEET ON CENTER ALONG EACH MAIN RUNNER AND WITHIN 8 INCHES FROM EACH WALL. WIRES SHALL NOT HANG MORE THAN 1 IN 6 OUT - OF - PLUMB AND SHALL NOT ATTACH TO OR BEND AROUND INTERFERING MATERIALS OR EQUIPMENT.
   - 4.2. PROVIDE LATERAL BRACING WITH (4) NO.12 GA. WIRES SECURED TO MAIN RUNNER WITHIN 2 INCHES OF THE CROSS-RUNNER INTERSECTION AND SPLAYED 90 DEGREES FROM EACH OTHER AT AN ANGLE NOT EXCEEDING 45 DEGREES FROM THE PLANE OF THE CEILING, PLACED 12 FEET ON CENTER IN BOTH DIRECTIONS WITH THE FIRST POINT WITHIN 6 FEET FROM EACH WALL. PROVIDE VERTICAL STRUT FROM THE MAIN RUNNER TO STRUCTURE ABOVE AT EACH LATERAL BRACING POINT.
   - 4.3. ALL LIGHT FIXTURES AND HVAC DIFFUSERS SHALL BE POSITIVELY ATTACHED TO THE SUSPENDED CEILING SYSTEM. ALL LIGHT FIXTURES AND HVAC DIFFUSERS BETWEEN 20 LBS. AND 56 LBS. SHALL BE SUPPORTED DIRECTLY FROM THE STRUCTURE ABOVE.
   - 4.4. NEW SUSPENDED CEILING SYSTEMS SHALL BE INSTALLED PER ALL MANUFACTURER REQUIREMENTS.
   - 4.5. GENERAL CONTRACTOR TO PROVIDE CEILING GRID SHOP DRAWINGS FOR APPROVAL BY ARCHITECT PRIOR TO INSTALLATION OF NEW CEILING SYSTEMS.

5. INSTALLATION OF VINYL FLOORING: AND TOP SET BASE SHALL COMPLY WITH ALL MANUFACTURER REQUIREMENTS AND AS FOLLOWS:
   - 5.1. FLOOR PATCH AND LEVELING COMPOUND: PRODUCTS MANUFACTURED SPECIFICALLY FOR THE PURPOSE AS RECOMMENDED BY MANUFACTURER OF RESILIENT FLOORIN MATERIAL FURNISHED.
   - 5.2. ADHESIVE: PROVIDE TYPE AND BRANDS OF WATER-RESISTANT ADHESIVE AS RECOMMENDED BY MANUFACTURER OF RESILENT FLOORING MATERIAL FOR CONDITIONS OF INSTALLATION.
   - 5.3. FINAL CLEANING: AFTER COMPLETION OF INSTALLATION OF FLOOR COVERING AND ADJACENT WORK AND AFTER MATERIALS HAVE SET, CLEAN SURFACES WITH NEUTRAL CLEANER AS RECOMMENDED BY MANUFACTURER FOR TYPE OF FLOOR - COVERING MATERIAL INSTALLED.

6. SEALANTS: FURNISH AND INSTALL ALL SEALANTS AS REQUIRED TO PROVIDE A WEATHER TIGHT BUILDING.

7. INSULATION: SHALL MATCH EXISTING OR A SPECIFIED ON PLANS THE PLANS AND AS FOLLOW;
   - 7.1. AT INTERIOR WALL MATCH EXITING.
   - 7.2. AT EXTERIOR WALLS AND ROOF: AS REQUIRED BY LOCAL CODE REQUIREMENTS.
   - 7.3. INFILL JOINTS OF RELOCATED OR NEW ATMS TO OPENING IN WALL WITH INSTALLATION TO BLOCK AIR INFILTRATION PRIOR TO INSTALLING HOUSING.

8. SHEET METAL AND FLASHING: FURNISH AND INSTALL SHEET METAL AND FLASHING AS REQUIRED TO PROVIDE A COMPLETE INSTALLATION AND AS FOLLOWS:
   - 8.1. COMPLY WITH ARCHITECTURAL SHEET METAL MANUAL, PUBLISHED BY SMACNA.

9. ASPHALT CONCRETE PAVING: SHALL COMPLY WITH STANDARD SPECIFICATIONS OF STATE OF CALIFORNIA, DEPARTMENT OF TRANSPORTATION, CURRENT EDITION.
   - 9.1. ASPHALT CONCRETE: REPAIRS TO BE MADE WITH PLANT - MIXED CONFORMING TO STATE SPECIFICATIONS.
   - 9.2. AT AREAS OF REPAIR INSTALL BASE COURSE IN ACCORDANCE WITH STATE SPECIFICATIONS.

DESIGN BUILDING : ELECTRICAL / PLIMBING / MECHANICAL NOTES;

1. IT IS THE INTENT OF THESE PLANS THAT A COMPLETE AND WORKABLE ELECTRICAL, PLUMBING AND MECHANICAL INSTALLATION BE APPROVED ACCORDING TO THE N.E..C, U.P.C. AND U.M.C., STATE TITLE -24, AND LOCAL CODES REQUIREMENTS FOR ALL CONSTRUCTION AND INSTALLATIONS ITEMS CALLED OUT FROM OR REQUIRED FOR A COMPLETE PROJECT. CONSTRUCTION TO MEET ALL GOVERNING CODES AND TO MEET THE REQUIREMENTS OF THE BANKS. CONTRACTORS SHALL OBTAIN AND PAY FOR ALL PERMITS ALONG WITH PROVIDING ANY DESIGN BUILDING DOCUMENTS THAT ARE NECESSARY TO OBTAIN PERMITS, CONTRACTOR IS TO PROVIDE ALL LABOR, TOOLS, MATERIALS, AND FIXTURES AND TO INSTALL ALL APPARATUS FIXTURES AND MATERIALS IN A FASHION COMPLYING WITH ALL APPLICABLE CODES AND TO PROVIDE A COMPLETE AND CORRECT FUNCTIONING INSTALLATION. CONTRACTOR SHALL VERIFY LOCATION AND TYPE OF ALL UNDER GROUND AND CONCEALED UTILITIES PRIOR TO START OF WORK, INCLUDE ITEMS REQUIRED BUT NOT NORMALLY SHOW.

SPECIAL INSPECTIONS;

1. STATEMENT OF INSPECTIONS; ALL ATM EXPANSION ANCHORS INSTALLATION WORK REQUIRES A SPECIAL INSPECTION, TEST AND, STRUCTURAL OBSERVATION. CBC, SEC. 1704.2.3

2. SPECIAL INSPECTIONS FOR EXPANSION ANCHORS (ATM INSTALLATION FOR SECURITY, SEE SHEET
A12.2 AND A12.3

3. **NOTICE TO THE APPLICANT/OWNER/OWNERS'S AGENT/ARCHITECT OR ENGINEER OF RECORD** BY USING THIS PERMITTED CONSTRUCTION DRAWINGS FOR CONSTRUCTION/INSTALLATION OF THE WORK SPECIFIED HEREIN, YOU AGREE TO COMPLY WITH THE REQUIREMENTS OF THE CITY OF OAKLAND FOR SPECIAL INSPECTIONS, STRUCTURAL OBSERVATIONS, CONSTRUCTION MATERIAL TESTING AND OFF-SITE FABRICATION OF BUILDING COMPONENTS, CONTAINED IN THE STATEMENT OF SPECIAL INSPECTIONS AND, AS REQUIRED BY THE CALIFORNIA CONSTRUCTION CODES.

4. **NOTICE TO THE CONTRACTOR/BUILDERS/SUB-CONTRACTOR/OWNER-BUILDER:** BY USING THIS PERMITTED CONSTRUCTION DRAWINGS FOR CONSTRUCTION/INSTALLATION OF THE WORK SPECIFIED HEREIN, YOU ACKNOWLEDGE AND ARE AWARE OF, THE REQUIREMENTS CONTAINED IN THE STATEMENT OF SPECIAL INSPECTIONS, YOU TO COMPLY WITH THE REQUIREMENTS OF CITY OF OAKLAND FOR SPECIAL INSPECTIONS, STRUCTURAL OBSERVATIONS, CONSTRUCTION MATERIAL TESTING AND OFF-SITE FABRICATION OF BUILDING COMPONENTS, CONTAINED IN THE STATEMENT OF SPECIAL INSPECTION AND AS REQUIRED BY THE CALIFORNIA CONSTRUCTION CODES.

5. THE SPECIAL INSPECTOR MUST REQUIRE BY THE CITY OF OAKLAND DEVELOPMENT SERVICES , IN THE CATEGORY OF WORK REQUIRED TO HAVE SPECIAL INSPECTION.

6. THE SPECIAL INSPECTIONS IDENTIFIED ON PLANS ARE, IN ADDITION TO, AND NOT A SUBSTITUTE FOR, THOSE INSPECTIONS REQUIRE TO BE PERFORMED BY A CITY'S BUILDING INSPECTOR.

CITY OF OAKLAND
Community & Economic Development Agency

SPECIAL INSPECTOR
DATA RECORD

BUILDING SERVICES DIVISION
250 FRANK OGAWA PLAZA,
2ND FLOOR
OAKLAND, CA 94612
(510) 238-3443

Address of Job	
OWNER/AGENT	
Owner's Name	
Owner's Address	
Agent's Name (if applicable)	
Agent's Address	
SPECIAL INSPECTOR	
Name	
Address	
Telephone Number	
License Number (if licensed in California)	

I certify that the above information is accurate. If the Special Inspector is relieved or discharged, I understand that the CEDA/Building Services Division must be notified immediately.

Signature of: ☐ owner ☐ agent

Date

EXCEL Construction Services, Inc.

Certified WBENC Women's Business Enterprise

1950 Raymer Ave.
Fullerton, CA 92833
www.excelconstruction.biz

CA #852879
AZ #ROC238178
NV #0071254

This drawing is the confidential property of EXCEL CONSTRUCTION SERVICES, INC. and is to be used only by authorized personnel and in the interest of the company. It must be accounted for; shall not be reproduced in whole or in part without prior written permission from EXCEL CONSTRUCTION SERVICES, INC. management, and must be returned to company at any time upon request, but in any event at the completion of the work or job. The recipient agrees to keep confidential, and to require his (its) employees to keep confidential, the information contained hereon. Disclosure of the information contained hereon shall be made only to those persons who require such information for their work on EXCEL CONSTRUCTION SERVICES, INC. projects.

Banck Of America
OAKLAND INDUSTRIAL CENTER
303 Hegenberger Road
Oakland, CA 94621
BAC Property ID: CA4-141

STAMPS SUMMARY:

ARCHITECTURAL STAMPS:

☐ IN PROGRESS
☐ APPROVED
☑ FOR CONSTRUCTION

CITY OF OAKLAND

ARCHITECTURAL STAMPS:

FOR CONSTRUCTION

LICENSED ARCHITECT
JOHN GILMORE DEENIHAN
C-9147
REN. 8/31/2021
STATE OF CALIFORNIA

FOR CONSTRUCTION

FOR CONSTRUCTION

MARK	DESCRIPTION	DATE
8	-	-
7	-	-
6	-	-
5	-	-
4	-	-
3	-	-
2	-	-
1	CHANGE ATM NCR-6688 TO DIEBOLD-7790	08-27-20

EXTERNAL REFERENCES:

PROJECT NAME: BAC CAP OAKLAND IND.CTR. DRIVE UP ISLAND ATM

PROPERTY ID: #: CA2-121

DRAWING DESCRIPTION: GENERAL NOTES AND SPECIFIATION NOTES

1

NEW ATM MODEL: DU ISL DIEBOLD 7790 ATM WITH TOP

PROJECT No.:	19-1231
DATE:	APRIL 25, 2020
SCALE:	AS NOTED
PROJECT MANAGER:	JR
DRAWN BY:	FJL
CHECKED BY:	JR

SHEET No.: A0.1

SHEET No.: 02 OF 09

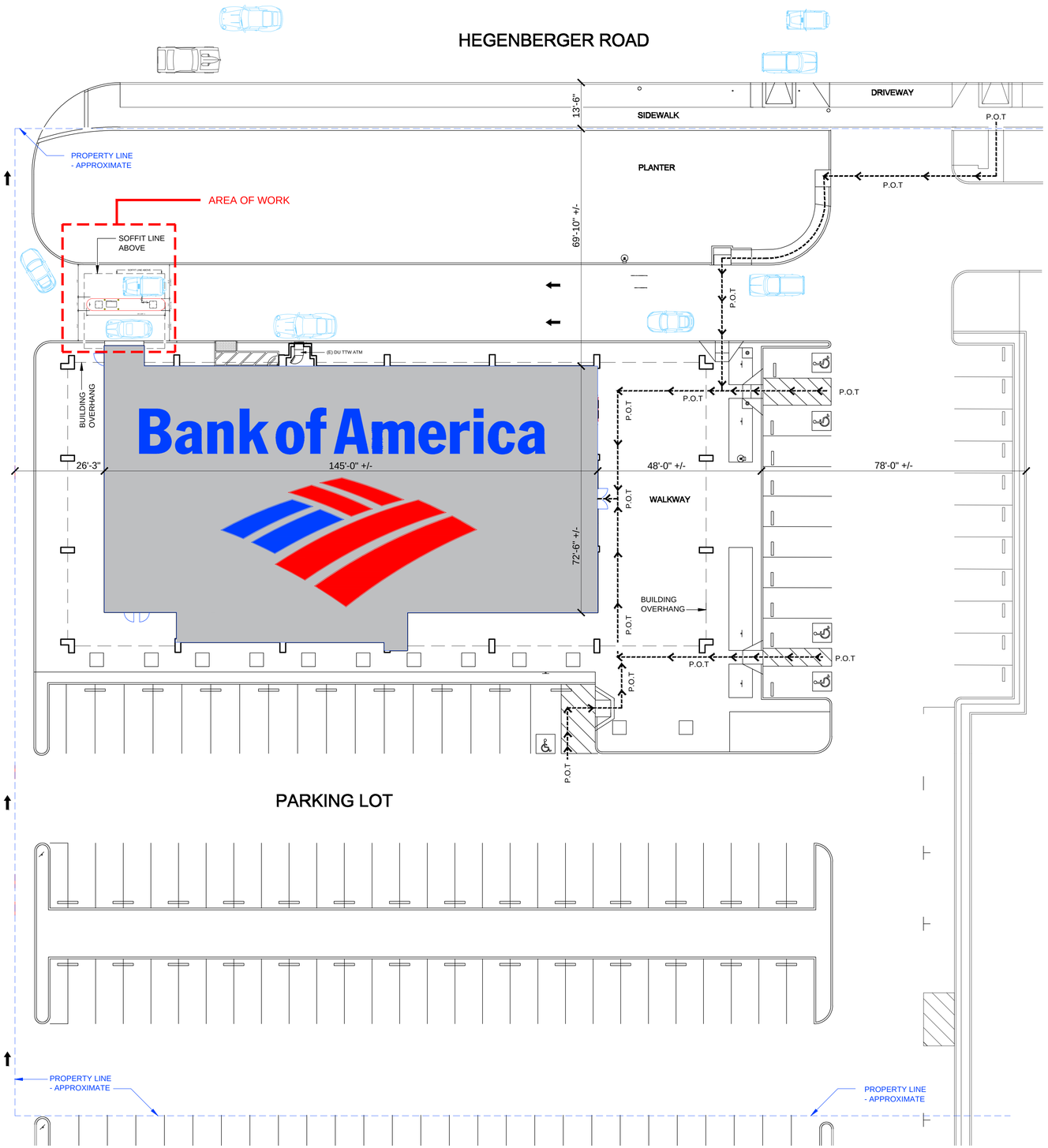

1 A0.2 SITE PLAN
SCALE: 1/6" = 1'-0"

North

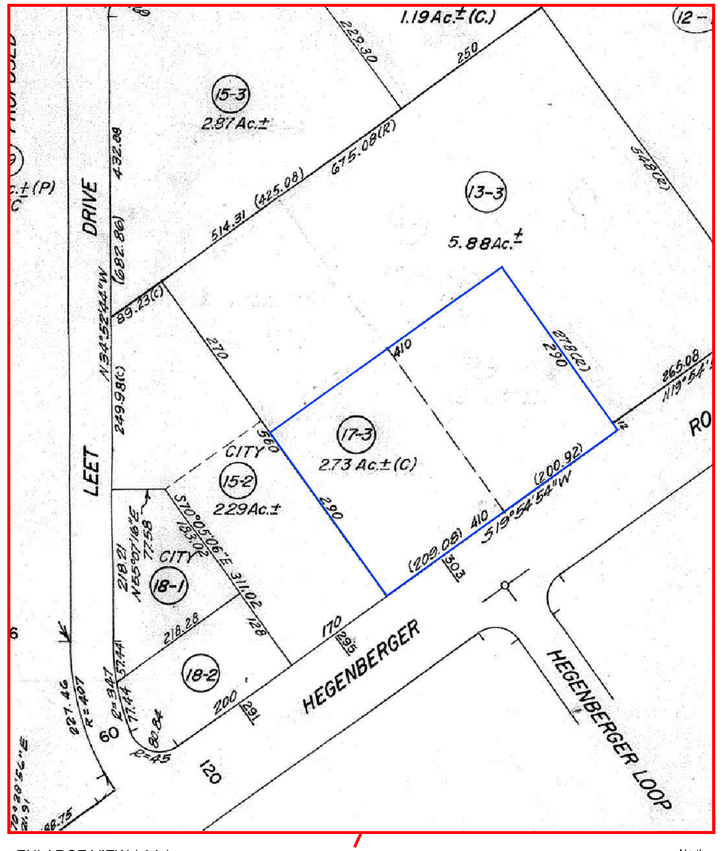

ENLARGE VIEW (AA)
SCALE = NONE

North

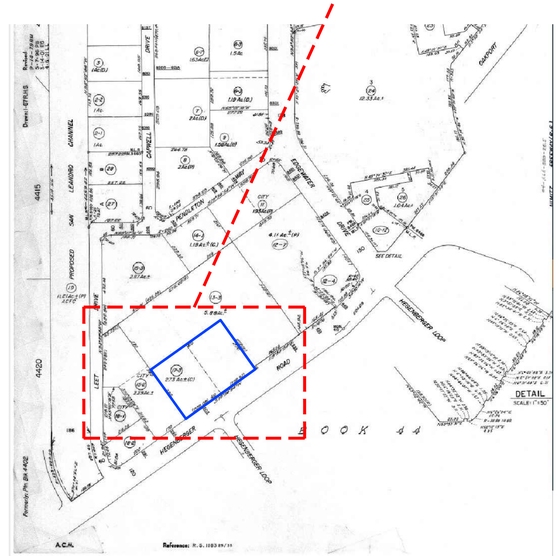

2 A0.2 PLOT PLAN
SCALE: NONE

North

EXCEL Construction Services, Inc.

Certified WBENC Women's Business Enterprise

1950 Raymer Ave.
Fullerton, CA 92833
www.excelconstruction.biz

CA #852879
AZ #ROC238178
NV #0071254

This drawing is the confidential property of EXCEL CONSTRUCTION SERVICES, INC. and is to be used only by authorized personnel and in the interest of the company. It must be accounted for; shall not be reproduced in whole or in part without prior written permission from EXCEL CONSTRUCTION SERVICES, INC. management, and must be returned to company at any time upon request, but in any event at the completion of the work or job. The recipient agrees to keep confidential, and to require his (its) employees to keep confidential, the information contained hereon. Disclosure of the information contained hereon shall be made only to those persons who require such information for their work on EXCEL CONSTRUCTION SERVICES, INC. projects.

Banck Of America
OAKLAND INDUSTRIAL CENTER
303 Hegenberger Road
Oakland, CA 94621
BAC Property ID: CA4-141

STAMPS SUMMARY:

ARCHITECTURAL STAMPS:
- ☐ IN PROGRESS
- ☐ APPROVED
- ☑ FOR CONSTRUCTION

CITY OF OAKLAND

ARCHITECTURAL STAMPS:

FOR CONSTRUCTION

LICENSED ARCHITECT
JOHN GILMORE DEENIGAN
C-3147
REN. 8/31/2021
STATE OF CALIFORNIA

FOR CONSTRUCTION

FOR CONSTRUCTION

MARK	DESCRIPTION	DATE
8	-	-
7	-	-
6	-	-
5	-	-
4	-	-
3	-	-
2	-	-
1	CHANGE ATM NCR-6688 TO DIEBOLD-7790	08-27-20

EXTERNAL REFERENCES:

PROJECT NAME:
BAC CAP OAKLAND IND.CTR.
DRIVE UP ISLAND ATM

PROPERTY ID:
#: CA2-121

DRAWING DESCRIPTION:
SITE & PLOT PLAN

NEW ATM MODEL
1 DU ISL DIEBOLD 7790 ATM WITH TOP

PROJECT No.:	19-1231
DATE:	APRIL 25, 2020
SCALE:	AS NOTED
PROJECT MANAGER:	JR
DRAWN BY:	FJL
CHECKED BY:	JR

SHEET No.: A0.2

SHEET No.: 03 OF 09

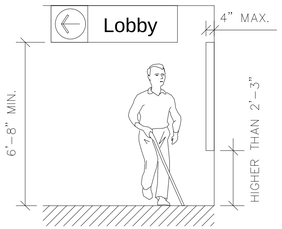

1 HEIGHTS
A0.4.1 SCALE: N.T.S.

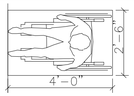

C PLAN LAYOUT

NOTES:
1. INFORMATION SHOWN IS FOR UNOBSTRUCTED REACH
2. SEE 13/T-3 FOR OBSTRUCTED REACH REQUIREMENTS.

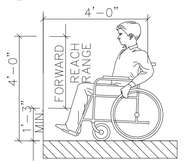

A FRONT APPROACH

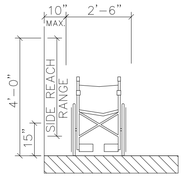

B SIDE APPROACH

2 REACH: UNOBSTRUCTED
A0.4.1 SCALE: 3/8"=1'-0"

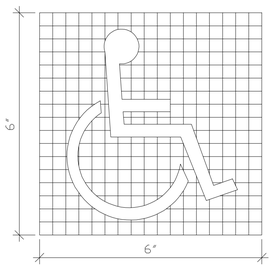

A SYMBOL PROPORTIONS

B DISPLAY CONDITIONS

NOTE: PROVIDE ACCESSIBILITY SIGN AT ALL ACCESSIBLE ENTRANCE DOORS

3 INTERNATIONAL SYMBOL OF ACCESSIBILITY
A0.4.1 SCALE: N.T.S.

PER 2013 CBC SECTION 11B-308.3.2
MAXIMUM SIDE REACH DEPTH FOR ATMs
FOR FRONT REACH SEE 2013 CBC SECTION 11B-308.2.2
(SEE SHEET T-1 ATM NOTES & DETAILS 9/T-4 & 10/T-4)

REACH DEPTH (X) (INCHES)	MAXIMUM HGT. (Y) (INCHES)	A.D.A. MAX. HGT.
up to 10	48	48
11	46	46
12	46	46
13	46	46
14	46	46
15	46	46
16	46	46
17	46	46
18	46	46
19	46	46
20	46	46
21	46	46
22	46	46
23	46	46
24	46	46

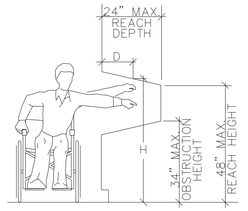

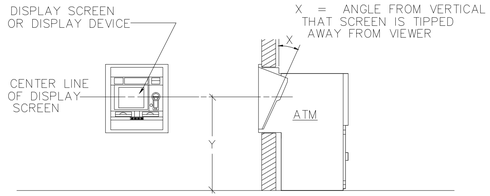

DIMENSIONS WHEN SCREENS ARE TIPPED AWAY FROM VIEWER
WHEN X = 30 DEGREES OR LESS, THEN Y = 52" MAX. ABOVE GRADE.
WHEN X IS BETWEEN 30 DEG. AND 60 DEG., THEN Y = 44" MAX. ABOVE GRADE.
WHEN X IS BETWEEN 60 DEG. AND 90 DEG., THEN Y = 34" MAX. ABOVE GRADE.

4 ATM HEIGHT AND REACH
A0.4.1 SCALE: 3/16" = 1'-0"

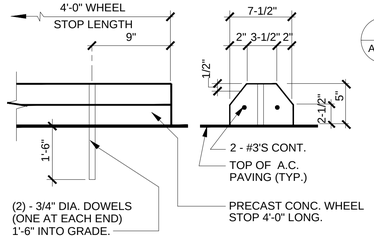

5 CONCRETE WHEEL STOP
A0.4.1 SCALE: 1 1/2" = 1'-0"

NOTES:
1. REFLECTORIZED SIGN CONSTRUCTED OF PORCELAIN STEEL WITH BEADED TEXT OR EQUAL.
2. DIRECTIONAL SIGNAGE PROVIDED WHERE ACCESSIBLE ROUTE DIVERGES FROM THE REGULAR CIRCULATION PATH.
3. ARROW DIRECTION TO POINT TO ACCESSIBLE ROUTE. VERIFY IN FIELD. VERIFY ARROW DIRECTION WITH ARCHITECT.

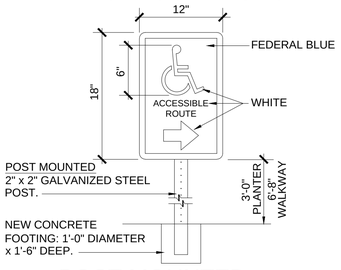

6 POST MOUNTED DIRECTIONAL SIGN
A0.4.1 SCALE: N.T.S.

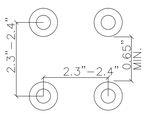

TRUNCATED DOME SPACING

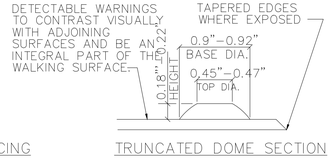

TRUNCATED DOME SECTION

7 DETECTABLE WARNING
A0.4.1 SCALE: N.T.S.

ACCESS RAMP CONSTRUCTION NOTES

1. RAMP SHALL HAVE A 12" WIDE BORDER WITH 1/4" X 1/4" GROOVES AT 3/4" OC AND PER 2013 CALIFORNIA BUILDING CODE.
2. THE SURFACE OF THE TRANSITIONS AND LANDINGS SHALL HAVE A STABLE, FIRM AND SLIP RESISTANT SURFACE.
3. RAMP CONSTRUCTION SHALL COMPLY WITH ALL FEDERAL, STATE AND LOCAL CODES.
4. CURB RAMPS TO HAVE DETECTABLE WARNING THAT EXTENDS FULL WIDTH OF THE CURB RAMP & 36" IN THE DIRECTION OF TRAVEL, EXCLUDING THE FLARED SIDES, INSIDE THE GROOVED BORDER.
5. DETECTABLE WARNINGS SHALL BE LOCATED SO THE EDGE NEAREST THE CURB IS 6" MINIMUM AND 8" MAXIMUM FROM THE LINE AT THE FACE OF THE CURB MARKING THE TRANSITION BETWEEN THE CURB AND THE GUTTER, STREET OR HIGHWAY, EXCEPT ON PARALLEL CURB RAMPS, DETECTABLE WARNINGS SHALL BE PLACED ON THE TURNING SPACE AT THE FLUSH TRANSITION BETWEEN THE STREET AND THE SIDEWALK.
6. COUNTER SLOPES OF ADJOINING GUTTERS AND ROAD SURFACES IMMEDIATELY ADJACENT TO AND WITHIN 24 INCHES OF THE CURB RAMP SHALL NOT BE STEEPER THAN 1 :20.

10 CURB RAMP
A0.4.1 SCALE: N.T.S.

NOTES:
1. REFLECTORIZED SIGN CONSTRUCTED OF PORCELAIN STEEL WITH BEADED TEXT OR EQUAL.
2. DIRECTIONAL SIGNAGE PROVIDED WHERE ACCESSIBLE ROUTE DIVERGES FROM THE REGULAR CIRCULATION PATH.
3. ARROW DIRECTION TO POINT TO ACCESSIBLE ROUTE. VERIFY IN FIELD. VERIFY ARROW DIRECTION WITH ARCHITECT.

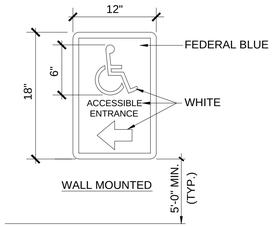

11 WALL MOUNTED DIRECTIONAL SIGN
A0.4.1 SCALE: N.T.S.

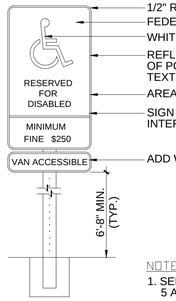

NOTES:
1. SEE SHEET A00.00, DISABLED ACCESS NOTES 5 AND 6 FOR MORE INFORMATION.

8 DISABLED PARKING SIGNS
A0.4.1 SCALE: N.T.S.

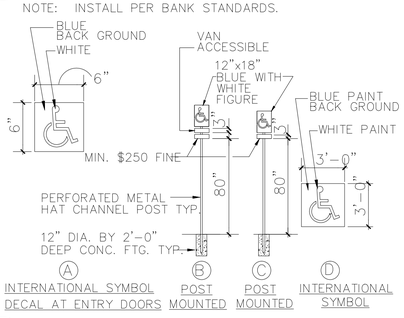

12 DISABLED PARKING SIGNS
A0.4.1 SCALE: N.T.S.

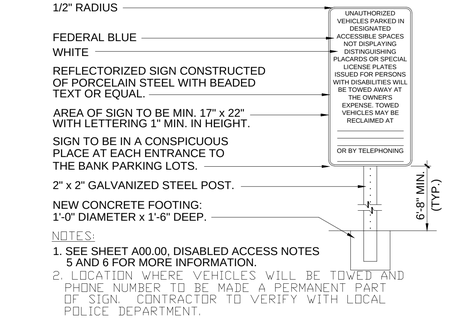

NOTES:
1. SEE SHEET A00.00, DISABLED ACCESS NOTES 5 AND 6 FOR MORE INFORMATION.
2. LOCATION WHERE VEHICLES WILL BE TOWED AND PHONE NUMBER TO BE MADE A PERMANENT PART OF SIGN. CONTRACTOR TO VERIFY WITH LOCAL POLICE DEPARTMENT.

9 PARKING LOT ENTRY SIGNS
A0.4.1 SCALE: N.T.S.

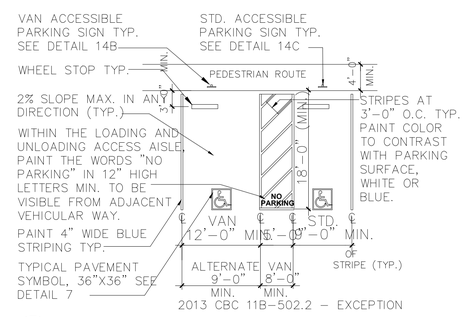

13 DISABLED STALL PLAN
A0.4.1 SCALE: N.T.S.

EXCEL Construction Services, Inc.
Certified WBENC Women's Business Enterprise
1950 Raymer Ave.
Fullerton, CA 92833
www.excelconstruction.biz
CA #852879
AZ #ROC238178
NV #0071254

This drawing is the confidential property of EXCEL CONSTRUCTION SERVICES, INC. and is to be used only by authorized personnel and in the interest of the company. It must be accounted for; shall not be reproduced in whole or in part without prior written permission from EXCEL CONSTRUCTION SERVICES, INC. management, and must be returned to company at any time upon request, but in any event at the completion of the work or job. The recipient agrees to keep confidential, and to require his (its) employees to keep confidential, the information contained hereon. Disclosure of the information contained hereon shall be made only to those persons who require such information for their work on EXCEL CONSTRUCTION SERVICES, INC. projects.

Banck Of America
OAKLAND INDUSTRIAL CENTER
303 Hegenberger Road
Oakland, CA 94621
BAC Property ID: CA4-141

STAMPS SUMMARY:

ARCHITECTURAL STAMPS:
- ☐ IN PROGRESS
- ☐ APPROVED
- ☑ FOR CONSTRUCTION

CITY OF OAKLAND

ARCHITECTURAL STAMPS:

FOR CONSTRUCTION

LICENSED ARCHITECT JOHN GILMORE DIEDERICH C-17147 REN: 8/31/2021 STATE OF CALIFORNIA

FOR CONSTRUCTION

FOR CONSTRUCTION

MARK	DESCRIPTION	DATE
8	-	-
7	-	-
6	-	-
5	-	-
4	-	-
3	-	-
2	-	-
1	CHANGE ATM NCR-6688 TO DIEBOLD-7790	08-27-20

EXTERNAL REFERENCES:

PROJECT NAME: BAC CAP OAKLAND IND.CTR. DRIVE UP ISLAND ATM

PROPERTY ID: #: CA2-121

DRAWING DESCRIPTION: TITLESHEET #4.1-DISABLED ACCESS DETAILS

NEW ATM MODEL

1 DU ISL DIEBOLD 7790 ATM WITH TOP

PROJECT No.:	19-1231
DATE:	APRIL 25, 2020
SCALE:	AS NOTED
PROJECT MANAGER:	JR
DRAWN BY:	FJL
CHECKED BY:	JR

SHEET No.: A0.4.1

SHEET No.: 04 OF 09

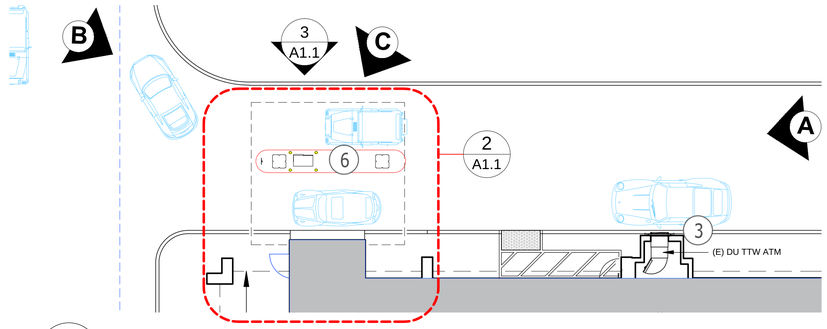

1 A1.1 FLOOR PLAN - EXISTING
SCALE: 3/32" = 1'-0"

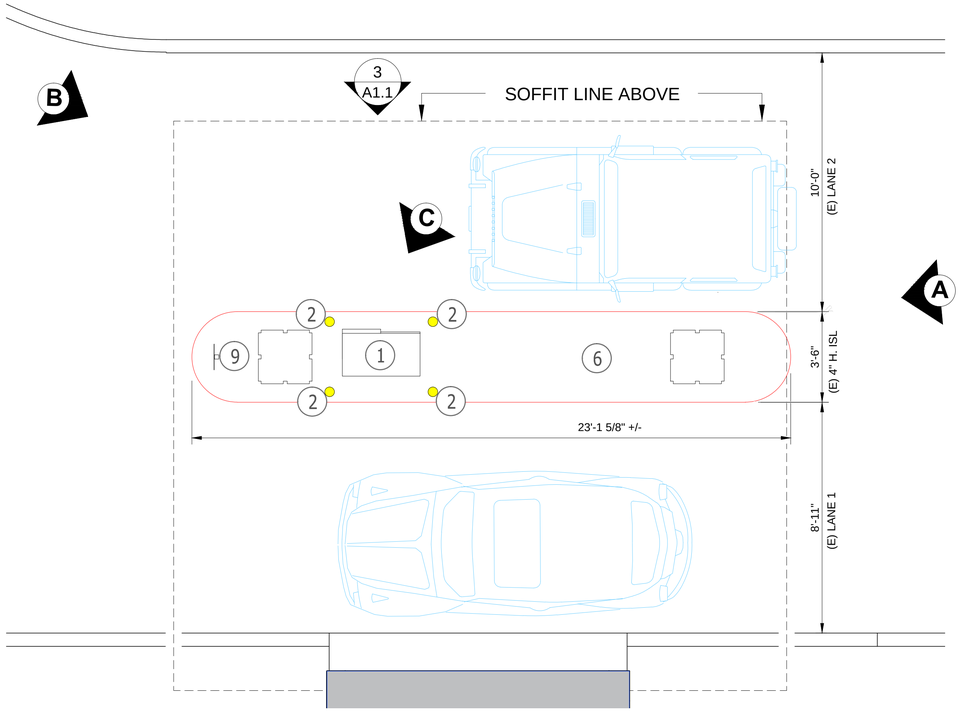

2 A1.1 ENLARGE VIEW
SCALE: 3/8" = 1'-0"

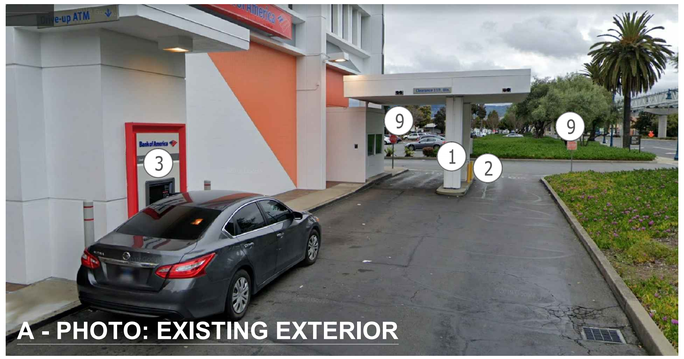
A - PHOTO: EXISTING EXTERIOR

B - PHOTO: EXISTING EXTERIOR

C - PHOTO: EXISTING EXTERIOR

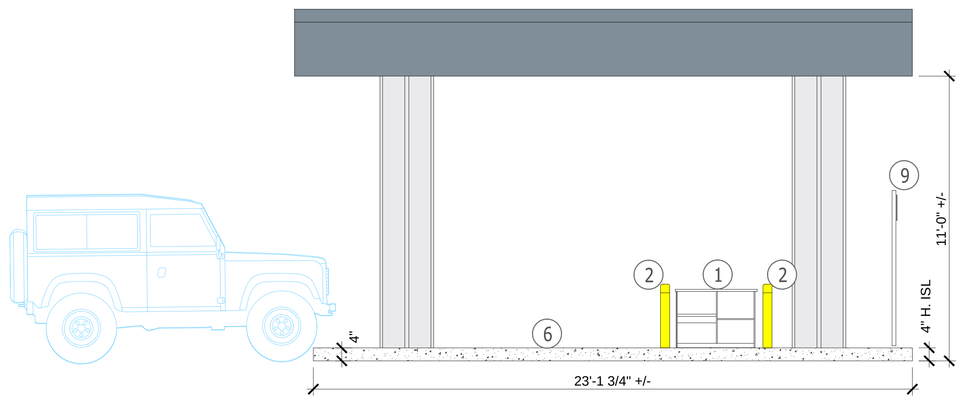

3 A1.1 ELEVATION PLAN - EXISTING
3/8" = 1'-0"

North

SHEET NOTES

- (A) SECTION AND ELEVATION ARE BASED ON BANK OF AMERICA PROVIDED INFORMATION AND IS FOR REFERENCE ONLY. FIELD VERY EXISTING CONDITIONS
- (B) G.C. TO VERIFY EXISTING CONDITIONS AND NOTIFY ARCHITECT OF DISCREPANCIES.
- (C) ALL FINISHES TO MATCH EXISTING
- (D) DEMO / REWORK ALL EXISTING BOLLARDS TO BRING TO BAC SPECIFICATIONS

KEY NOTES

1. DEMO / REMOVE EXISTING DU ISL NIGHT BOX
2. DEMO / REMOVE EXISTING BOLLARDS(QTY. 4)
3. ETR DU TTW ATM
4. NOT USED
5. NOT USED
6. EXISTING 4" HIGH CONCRETE ISLAND CURB @ 3'-6" WIDE TO EXTEND TO 4'-0" WIDE
7. NOT USED
8. NOT USED
9. ETR SIGNAGE

EXCEL Construction Services, Inc.
Certified WBENC Women's Business Enterprise
1950 Raymer Ave.
Fullerton, CA 92833
www.excelconstruction.biz

CA #852879
AZ #ROC238178
NV #0071254

This drawing is the confidential property of EXCEL CONSTRUCTION SERVICES, INC. and is to be used only by authorized personnel and in the interest of the company. It must be accounted for; shall not be reproduced in whole or in part without prior written permission from EXCEL CONSTRUCTION SERVICES, INC. management, and must be returned to company at any time upon request, but in any event at the completion of the work or job. The recipient agrees to keep confidential, and to require his (its) employees to keep confidential, the information contained hereon. Disclosure of the information contained hereon shall be made only to those persons who require such information for their work on EXCEL CONSTRUCTION SERVICES, INC. projects.

Banck Of America
OAKLAND INDUSTRIAL CENTER
303 Hegenberger Road
Oakland, CA 94621
BAC Property ID: CA4-141

STAMPS SUMMARY:

ARCHITECTURAL STAMPS:
- ☐ IN PROGRESS
- ☐ APPROVED
- ☑ FOR CONSTRUCTION

CITY OF OAKLAND

ARCHITECTURAL STAMPS:

FOR CONSTRUCTION

LICENSED ARCHITECT
JOHN GILMORE DEENIGAN
C-9147
REN. 8/31/2021
STATE OF CALIFORNIA

FOR CONSTRUCTION

FOR CONSTRUCTION

MARK	DESCRIPTION	DATE
8	-	-
7	-	-
6	-	-
5	-	-
4	-	-
3	-	-
2	-	-
1	CHANGE ATM NCR-6688 TO DIEBOLD-7790	08-27-20

EXTERNAL REFERENCES:

PROJECT NAME: BAC CAP OAKLAND IND.CTR. DRIVE UP ISLAND ATM

PROPERTY ID: #: CA2-121

DRAWING DESCRIPTION: PLAN, ELEVATION & SECTION-EXISTING AND DEMO PLAN

NEW ATM MODEL: DU ISL DIEBOLD 7790 ATM WITH TOP

PROJECT No.:	19-1231
DATE:	APRIL 25, 2020
SCALE:	AS NOTED
PROJECT MANAGER:	JR
DRAWN BY:	FJL
CHECKED BY:	JR

SHEET No.: A1.1

SHEET No.: 05 OF 09

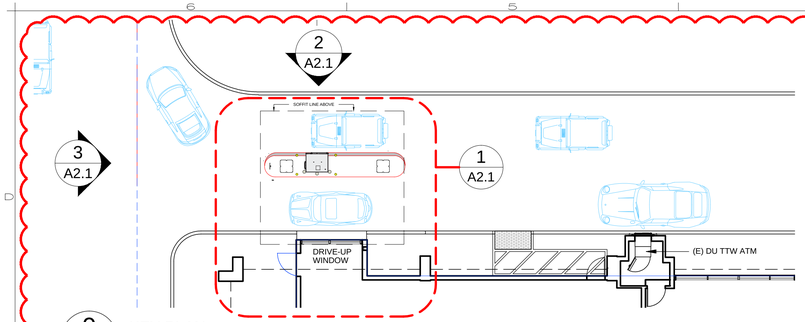

0 A2.1 KEY PLAN
SCALE: 3/32" = 1'-0"

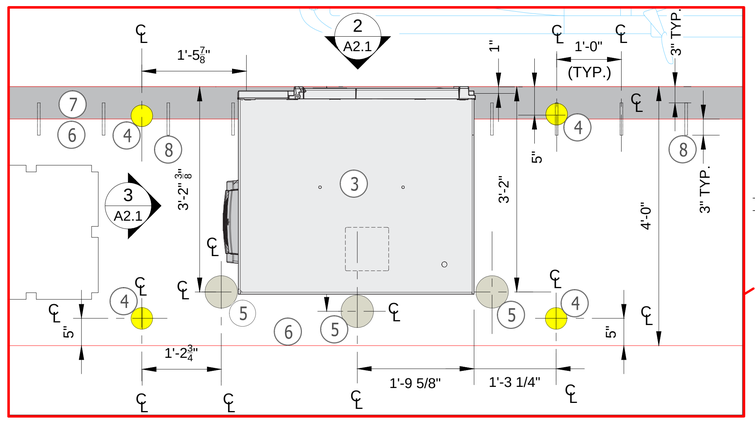

ENLARGE VIEW (AA)
SCALE = NONE

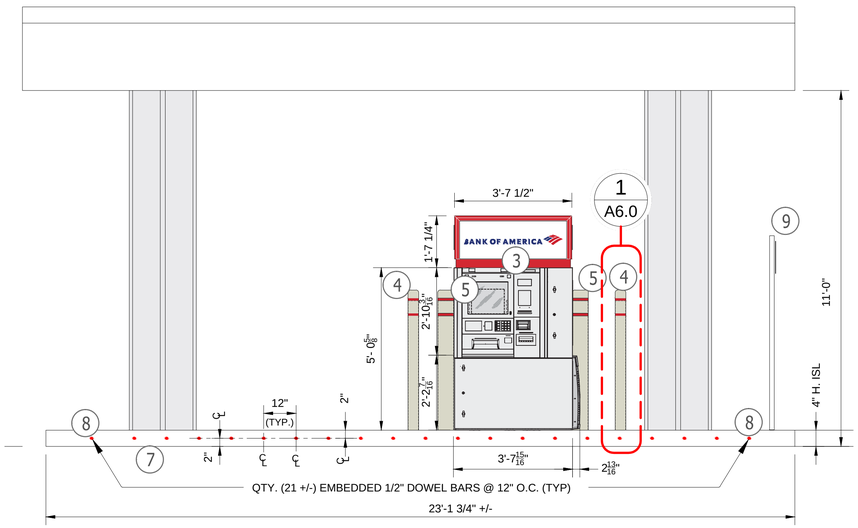

2 A2.1 ELEVATION PLAN - EXISTING
3/8" = 1'-0"

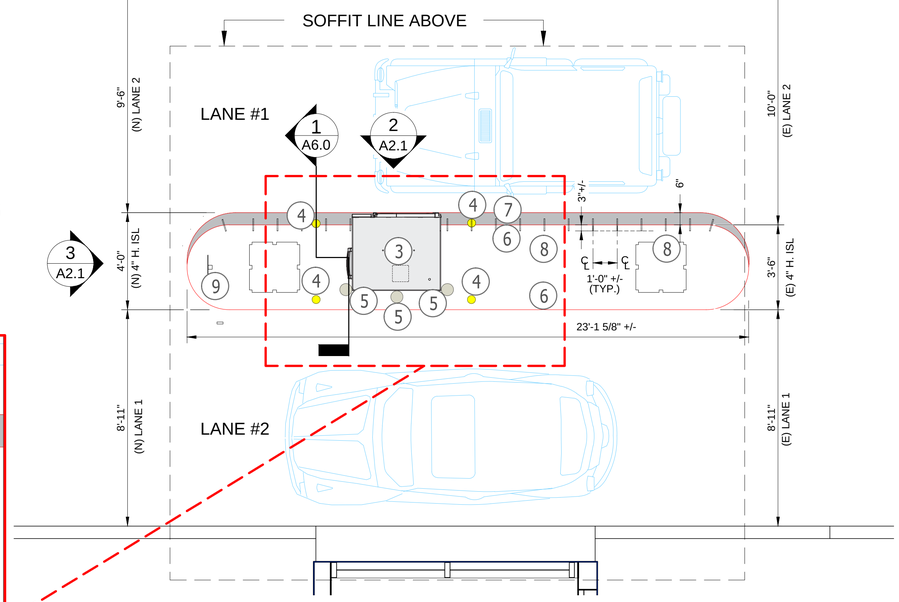

1 A2.1 FLOOR PLAN - EXISTING
SCALE: 3/8" = 1'-0"

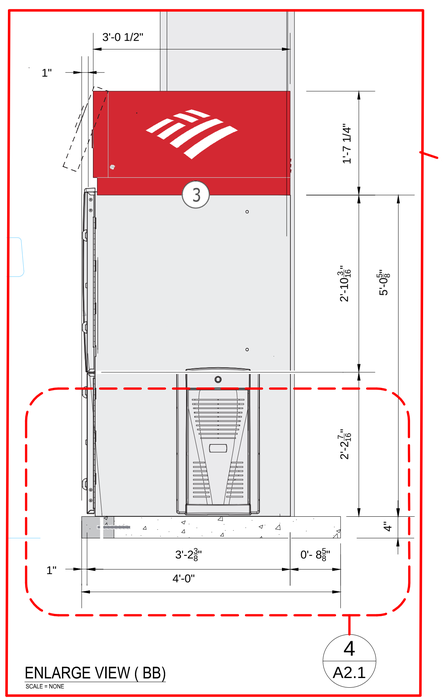

ENLARGE VIEW (BB)
SCALE = NONE

4 A2.1

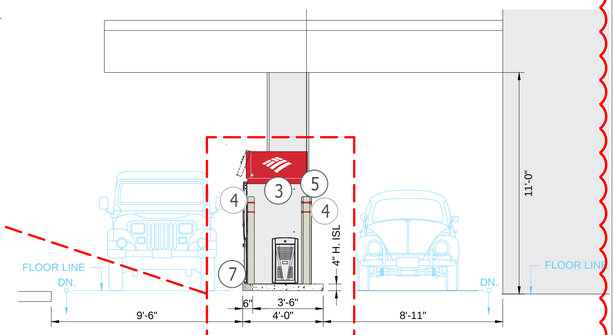

3 A2.1 RIGHT SIDE ATM ELEVATION - NEW
SCALE: 3/8" = 1'-0"

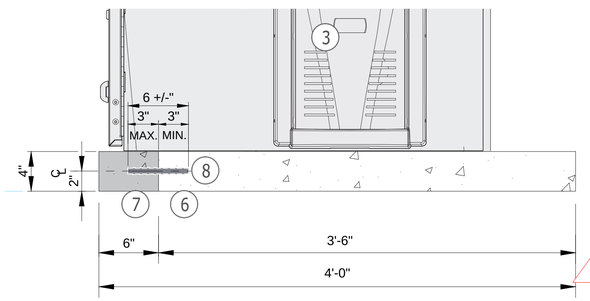

4 A2.1 NEW 6" WIDE. CONCRETE EXPANSION
SCALE: NONE

North

KEY NOTES

- (A) SECTION AND ELEVATION ARE BASED ON BANK OF AMERICA PROVIDED INFORMATION AND IS FOR REFERENCE ONLY. FIELD VERY EXISTING CONDITIONS
- (B) G.C. TO VERIFY EXISTING CONDITIONS AND NOTIFY ARCHITECT OF DISCREPANCIES.
- (C) ALL FINISHES TO MATCH EXISTING
- (D) DEMO / REWORK ALL EXISTING BOLLARDS TO BRING TO BAC SPECIFICATIONS

SHEET NOTES

1. DEMO/REMOVE EXISTING DU ISL NIGHT BOX
2. DEMO/REMOVE EXISTING BOLLARDS(QTY. 4)
3. NEW DU ISL DIEBOLD 7790 ATM WITH TOP FRAME-R-TOP-NG_3.0-D7790 WITH DEDICATED POWER AND DATA CONNECTIVITY FOR BOTH
4. NEW 4" BOLLARDS (QTY. 4)
5. NEW 6" BOLLARDS (QTY. 3)
6. EXISTING 4" HIGH CONCRETE ISLAND CURB @ 3'-6" WIDE TO EXPAND TO 6"
7. NEW 4" HIGH, EXTENDED 6" CONCRETE ISLAND CURB FROM 3'-6" WIDE. TO 4'-0" WIDE
8. NEW $\frac{3}{4}$" DOWEL BARS @ 12" O.C. (QTY. 21 +/-)
9. NOT USED
10. ETR SIGNAGE

EXCEL Construction Services, Inc.
Certified WBENC Women's Business Enterprise
1950 Raymer Ave.
Fullerton, CA 92833
www.excelconstruction.biz

CA #852879
AZ #ROC238178
NV #0071254

This drawing is the confidential property of EXCEL CONSTRUCTION SERVICES, INC. and is to be used only by authorized personnel and in the interest of the company. It must be accounted for; shall not be reproduced in whole or in part without prior written permission from EXCEL CONSTRUCTION SERVICES INC. management, and must be returned to company at any time upon request, but in any event at the completion of the work or job. The recipient agrees to keep confidential, and to require his (its) employees to keep confidential, the information contained hereon. Disclosure of the information contained hereon shall be made only to those persons who require such information for their work on EXCEL CONSTRUCTION SERVICES, INC. projects.

Banck Of America
OAKLAND INDUSTRIAL CENTER
303 Hegenberger Road
Oakland, CA 94621
BAC Property ID: CA4-141

STAMPS SUMMARY:

ARCHITECTURAL STAMPS:
- ☐ IN PROGRESS
- ☐ APPROVED
- ☑ FOR CONSTRUCTION

CITY OF OAKLAND

ARCHITECTURAL STAMPS:
FOR CONSTRUCTION

LICENSED ARCHITECT JOHN GILMORE DEEMANN C-30147 REN. 8/31/2021 STATE OF CALIFORNIA

FOR CONSTRUCTION

FOR CONSTRUCTION

MARK	DESCRIPTION	DATE
9	-	-
7	-	-
6	-	-
5	-	-
4	-	-
3	-	-
2	-	-
1	CHANGE ATM NCR-6688 TO DIEBOLD-7790	08-27-20

EXTERNAL REFERENCES:

PROJECT NAME: BAC CAP OAKLAND IND.CTR. DRIVE UP ISLAND ATM

PROPERTY ID: #: CA2-121

DRAWING DESCRIPTION: PLAN, ELEVATION & SECTION - NEW

NEW ATM MODEL: DU ISL DIEBOLD 7790 ATM WITH TOP

PROJECT No.:	19-1231
DATE:	APRIL 25, 2020
SCALE:	AS NOTED
PROJECT MANAGER:	JR
DRAWN BY:	FJL
CHECKED BY:	JR

SHEET No.: A2.1

SHEET No.: 05 OF 09

CODES AND REGULATION INFO

LOCATION: 17430 Brookhurst Street
FOUNTAIN VALLEY, CA 92708

GOVERNING AUTHORITY: CITY OF FOUNTAIN VALLEY

BUILDING CODE: 2016 CALIFORNIA BUILDING CODE (2016 CBC) AND LATEST REVISIONS

MATERIAL SPECIFIC CODES:

- CONCRETE: ACI 318-14
- STEEL AISC 360-10
- WELDING AWS (LATEST REVISIONS)
- LIGHT GAGE STEEL: AISI (LATEST REVISIONS)

ASTM SPECIFICATIONS ON THE DRAWING SHALL BE OF THE LATEST REVISIONS

ALL WORK SHALL CONFORM TO THE MINIMUM STANDARDS OF THE CODES NOTED ABOVE AND ANY OTHER REGULATING AGENCIES WHICH HAVE AUTHORITY OVER ANY PORTION OF THE WORK

LIVE LOADS

CONSTRUCTION MATERIAL SHALL BE SPREAD OUT IF PLACED ON FRAMED ROOF OR FLOOR LOAD SHALL NOT EXCEED THE DEISGN LIVE LOAD PER SQUARE FOOT. PROVIDE ADEQUATE SHORING AND/OR BRACING WHERE STRUCTURE HAS NOT ATTAINED DESIGN STRENGHT.

- ROOF: 20 PSF
- FLOOR: 100 PSF
- ACCESSIBLE CEILINGS: 10 PSF
- INTERIOR PARTITIONS: 5 PSF

SEISMIC ANALYSIS

SEISMIC ANALYSIS PER CHAPTER 16 OF THE CODE FOR NON-STRUCTURAL COMPONENTS.

- S_S = 0.920
- S_1 = 0.358
- S_{MS} = 1.042
- S_{M1} = 0.603
- S_{DS} = 0.694
- S_{D1} = 0.402
- I_P = 1.0
- Z/h = 0.0
- SITE CLASS = D
- SDC = E

a_p AND R_p PER ASCE 7 TABLES 13.5-1 FOR ARCHITECTURAL COMPONENTS. PER ASCE 7 TABLES 13.6-1 FOR MECHANICAL AND ELECTRICAL COMPONENTS.

WIND ANALYSIS

BASIC WIND SPEED (V)= 110 mph

WIND EXPOSURE= C

TOPOGRAPHIC FACTOR (K_{zt}) = 1.0

ROOF SLOPE (0)= 0.0

BUILDING HEIGHT = 20 FT

CONCRETE

1. ALL CONCRETE CONSTRUCTION SHALL CONFORM WITH CHAPTER 19 OF THE CODE AND WITH THE PROVISIONS OF ACI 318, LATEST EDITION.
2. REINFORCED CONCRETE IS DESIGNED BY THE "ULTIMATE STRENGTH DESIGN METHOD".
3. CONCRETE MIXES SHALL BE DESIGNED BY THE APPROVED TESTING LABORATORY AND APPROVED BY THE STRUCTURAL ENGINEER. THE COMPRESSIVE STRENGHT OF THE CONCRETE SHALL BE PROPORTIONED BASED ON CHAPTER 19 OF THE CODE.
4. SCHEDULE OF STRUCTURAL CONCRETE 28-DAY STRENGTH AND TYPES:

LOCATION IN STRUCTURE	STRENGTH (PSI)	DENSITY (PCF)	MAX W/C RATIO
CONCRETE SLAB ON GRADE	2500	150	0.45

5. PORTLAND CEMENT SHALL CONFORM TO ASTM C 150, TYPE II
6. AGGEGATE FOR HARDROCK CONCRETE SHALL CONFORM TO ALL REQUIREMENTS AND TESTED OF ASTM C 33 AND PROJECT SPECIFICATIONS. EXCEPTIONS MAY BE USED ONLY WITH PERMISSION OF THE STRUCTURAL ENGINEER.
7. CONCRETE MIXING OPERATION, ETC. SHALL CONFORM TO ASTM C 94.
8. PLACEMENT OF CONCRETE SHALL CONFORM TO CODE SECTION 1905 AND PROJECT SPECIFICATION. CLEAN AND ROUGHEN TO $\frac{1}{4}$" AMPLITUDE ALL CONCRETE SURACES AGAINST WHICH NEW CONCRETE TO BE PLACED
9. ALL REINFORCING BARS, ANCHOR BOLTS AND OTHER CONCRETE INSERTS SHALL BE WELL SECURED IN POSITION PRIOR TO PLACE CONCRETE.
10. PROVIDE SLEEVES FOR PLUMBING AND ELECTRICAL OPENING IN CONCRETE BEFORE PLACING. DO NOT CUT ANY REINFORCING WHICH MAX CONFLICT. CORING IN CONCRETE IS NOT PERMITTED. NOTIFY THE STRUCTURAL ENGINEER IN ADVANCE OF CONDITIONS NOT SHOWN ON THE DRAWINGS. SEE THESE DRAWINGS FOR ADDITIONAL RESTRICTIONS ON THE PLACEMENT OF OPENING IN SLAB AND WALLS.
11. PIPES LARGER THAN 1$\frac{1}{2}$" DIAMETER SHALL NOT BE EMBEDDED IN THE STRUCTURAL CONCRETE EXCEPT WHERE SPECIFICALLY APPROVED BY STRUCTUEAL ENGINEER PIPES SHALL NOT DISPLACE OR INTERRUPT REINFORCING BARS, SPACE EMBEDDED PIPES AND SLEEVES AT A MINIMUM OF 3 DIAMETERS ON CENTER

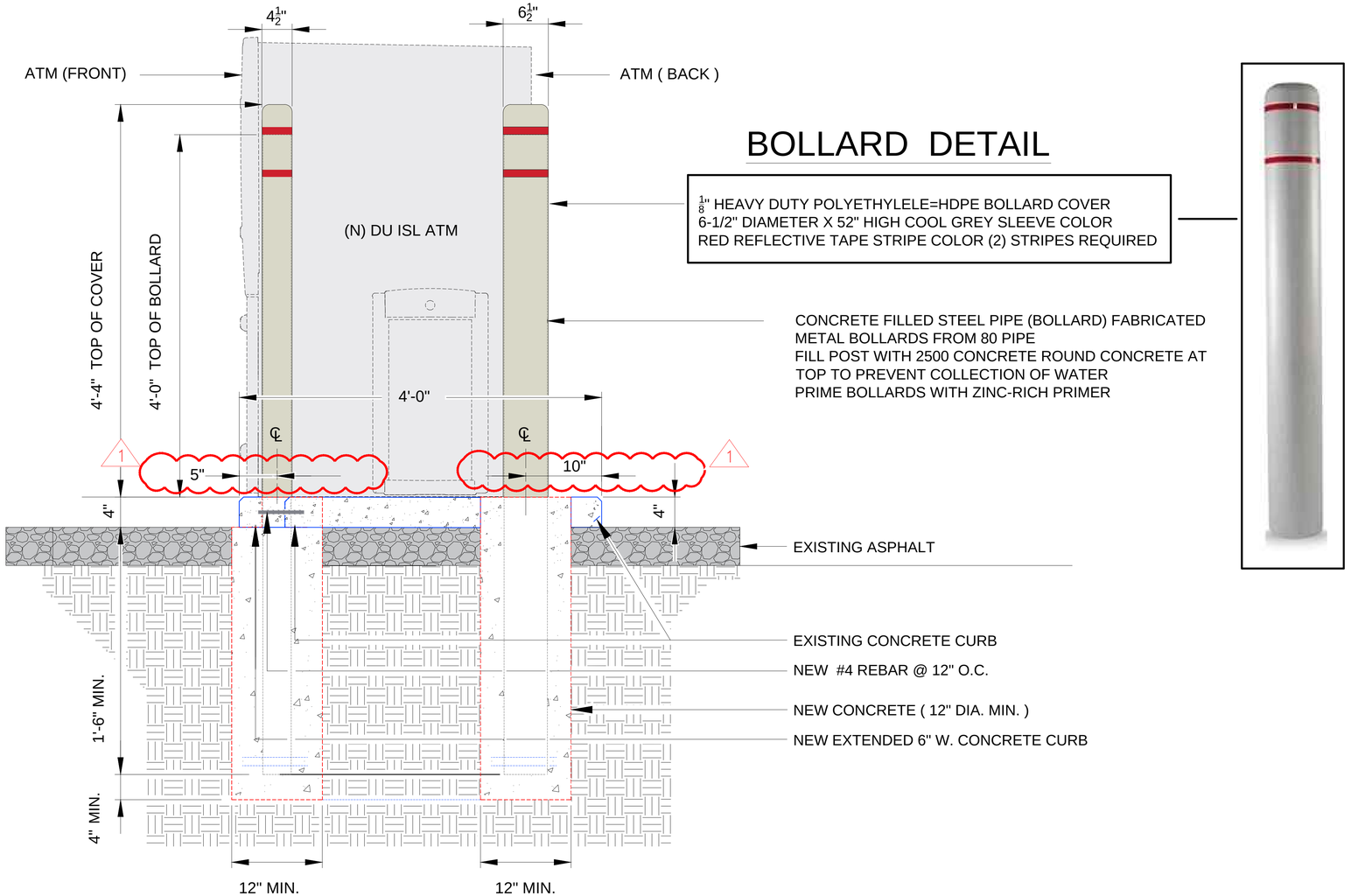

BOLLARD DETAIL

$\frac{1}{8}$" HEAVY DUTY POLYETHYLELE=HDPE BOLLARD COVER
6-1/2" DIAMETER X 52" HIGH COOL GREY SLEEVE COLOR
RED REFLECTIVE TAPE STRIPE COLOR (2) STRIPES REQUIRED

CONCRETE FILLED STEEL PIPE (BOLLARD) FABRICATED METAL BOLLARDS FROM 80 PIPE
FILL POST WITH 2500 CONCRETE ROUND CONCRETE AT TOP TO PREVENT COLLECTION OF WATER
PRIME BOLLARDS WITH ZINC-RICH PRIMER

EXISTING ASPHALT

EXISTING CONCRETE CURB

NEW #4 REBAR @ 12" O.C.

NEW CONCRETE (12" DIA. MIN.)

NEW EXTENDED 6" W. CONCRETE CURB

1 / A6.0 BOLLARD DETAIL
SCALE: 1 1/2" = 1'-0"

ADHESIVE ANCHOR SYSTEMS

1. ADHESIVES USED FOR SETTING DOWELS AND ANCHORS SHALL BE IN CONFORMANCE WITH ASTM C-881, TYPE IV ACCEPTABLE MANUFACTURERS FOR ADHESIVES ARE AS FOLLOWS

   CONCRETE
   SIMPSON SET-XP (ICC ESR-2508)
   HILTI HIT-RE 500-V3 (ICC ESR-3814)
   HILTI HIT-HY 150 SD (ICC ESR-3013)
   HILTI HIT-HY 200 (ICC ESR-3187)

2. ANCHORS OR DOWELS EMBEDDED IN ADHESIVES SHALL BE INSTALLED PER THE MANUFACTURE'S INSTRUCTIONS.
3. HOLES RECEIVING ADHESIVE ANCHORS SHALL BE CLEAN AND FREE OF DUST PRIOR TO APPLYING ADHESIVE
4. HOLES DRILLED INTO REINFORCED CONCRETE OR MASONRY SHALL NOT DAMAGE OR CUT EXISTING REINFORCING STEEL. HOLES DRILLED INTO PRE-STRESSED OR POST-TENSIONED CONCRETE SHALL HAVE A CLEARANCE OF ONE INCH MINIMUM FROM TENDONS. LOCATE EXISTING REINFORCING STEEL AND/OR TENDONS USING NON-DESTRUCTIVE METHODS PRIOR TO DRILLING.

EXPANSION ANCHORS

1. ANCHOR DIAMETER REFERS TO THE ANCHOR SIZE AND NOT THE DIAMETER OF THE DRILLED HOLE
2. ALL ANCHORS SHOULD MEET THE MINIMUM EMBEDMENT, EDGE DISTANCE, SPACING AND SLAB THICKNESS CRITERIA ESTABLISHED BY THE RELEVANT ICC-ES EVALUATION REPORT.REFER TO ICC-ESR 1917 FOR HILTI KWIK BOLT TZ (KBTZ) IN CONCRETE.
3. THE VALUES TABULATED IN THE ICC REPORTS ARE FOR INDIVIDUAL ANCHORS INSTALLED WITH THE MINIMUM SPACING AND EDGE DISTANCE SHOWN IN THE ICC REPORT. DO NOT LOCATE EXPANSION ANCHORS CLOSER TO EDGE OF CONCRETE/MASONRY OR TO CONTROL/CONSTRUCTION JOISTS THAN THE MINIMUM EDGE DISTANCE SPECIFIED IN THE ICC REPORT, UNO.
4. WHEN INSTALLING DRILLED-IN ANCHORS IN THE EXISTING NON-PRESTRESSED REINFORCED CONCRETE, USE CARE AND CAUTION TO AVOID CUTTING OR DAMAGING THE EXISTING REINFORCING BARS
5. IT IS NOT ACCEPTABLE TO SUBSTITUTE ANY CAST-IN-PLACE BOLTS/RODS/ANCHORS FOR EXPANSION ANCHORS WITHOUT PRIOR APPROVAL FROM THE ENGINEER OF RECORD.
6. USE HOT DIP GALVANIZED OR STAINLESS STEEL ANCHORS WHEN EXPANSION ANCHORS ARE EXPOSED TO WEATHER OR IN A DAMP ENVIRONMENT.
7. DESIGN LOADS SHOWN IN ICC REPORT TABLE CANNOT BE INCREASED BY 1.33 FOR SEISMIC OR WIND FORCES.
8. WHEN EXPANSION-TYPE ANCHORS ARE USED FOR STRUCTURAL APPLICATIONS, ALL SUCH EXPANSION ANCHORS SHALL BE TESTED.
9. WHEN EXPANSION-TYPE ANCHORS ARE USE FOR NON-STRUCTURAL APPLICATIONS SUCH AS EQUIPMENT ANCHORAGE, 50 PERCENT OR ALTERNATE BOLTS IN A GROUP, INCLUDING AT LEAST HALF THE ANCHORS IN EACH GROUP, SHALL BE TESTED
10. THE TESTING OF THE EXPANSION BOLTS SHALL BE DONE IN THE PRESENCE OF THE INSPECTOR OF RECORD AND A REPORT OF THE TEST RESULTS SHALL BE SUBMITTED TO THE ENFORCEMENT AGENCY.
11. IF ANY ANCHOR FAILS THE TESTING REQUIREMENTS, TEST ALL ANCHORS OF THE SAME TYPE, INSTALLED BY THE SAME TRADE, NOT PREVIOUSLY TESTED, UNTIL TWENTY (20) CONSECUTIVE ANCHORS PASSS, THEN RESUME THE INITIAL TEST FREQUENCY.
12. HOLES DRILLED FOR ANCHORS THAT DO NOT SET PROPERLY OR FAIL TESTING MAY NOT BE REUSED, AND SHALL BE FILLED WITH NON-SHRINK GROUT.
13. APPLY PROOF TEST LOAD TO MECHANICAL ANCHORS WITHOUT REMOVING THE NUT IF POSSIBLE. IF NOT, REMOVE NUT AND INSTALL A THREADED COUPLER TO THE SAME TIGHTNESS OF ORIGINAL NUT USING A TORQUE WRENCH AND APPLY LOAD.
14. REACTION LOAD FROM TEST FIXTURE(S) MAY BE APPLIED CLOSE TO THE ANCHOR BEING TESTED, PROVIDED THE ANCHOR IS NOT RESTRAINED FROM WITHDRAWING BY THE FIXTURE(S)
15. TEST EQUIPMENT IS TO BE CALIBRATED BY AN APPROVED TESTING LABORATORY IN ACCORDANCE WITH STANDARD RECOGNIZED PROCEDURES.
16. TEST SHOULD OCCUR 24 HOURS MINIMUM AFTER INSTALLATION OF SUBJECT ANCHORS.
17. THE ACCEPTANCE CRITERIA FOR INSTALLED ANCHORS IS THE FOLLOWING:
    A. HYDRAULIC RAM METHOD:
    ANCHORS TESTED WITH A HYDRAULIC JACK OR SPRING LOAD DEVICES SHALL MAINTAIN THE TEST LOAD FOR A MINIMUM OF 15 SECONDS AND SHALL EXHIBIT NO DISCERNABLE MOVEMENT DURING THE TENSION TEST. E.G. AS EVIDENCED BY LOOSENING OF THE WASHER UNDER THE NUT.
    B. TORQUE WRENCH METHOD:
    THE APPLICABLE TEST TORQUE MUST BE REACHED WITHIN THE FOLLOWING LIMITS:
    FOR WEDGE OR SLEEVE-TYPE ANCHOR: ONE HALF ($\frac{1}{2}$) TURN OF THE NUT. FOR THE $\frac{3}{8}$" SLEEVE ANCHOR ONLY: ONE QUARTER ($\frac{1}{4}$") TURN OF THE NUT.
18. TORQUE EXPANSION ANCHOR TO THE FOLLOWING VALUES:

ANCHOR DIA (IN)	TORQUE TEST (LB-FT)
3 / 8	25
1 / 2	40
5 / 8	60

EXCEL Construction Services, Inc.
Certified WBENC Women's Business Enterprise
1950 Raymer Ave.
Fullerton, CA 92833
www.excelconstruction.biz

CA #852879
AZ #ROC238178
NV #0071254

This drawing is the confidential property of EXCEL CONSTRUCTION SERVICES, INC. and is to be used only by authorized personnel and in the interest of the company. It must be accounted for; shall not be reproduced in whole or in part without prior written permission from EXCEL CONSTRUCTION SERVICES, INC. management, and must be returned to company at any time upon request, but in any event at the completion of the work or job. The recipient agrees to keep confidential, and to require his (its) employees to keep confidential, the information contained hereon. Disclosure of the information contained hereon shall be made only to those persons who require such information for their work on EXCEL CONSTRUCTION SERVICES, INC. projects.

Banck Of America
OAKLAND INDUSTRIAL CENTER
303 Hegenberger Road
Oakland, CA 94621
BAC Property ID: CA4-141

STAMPS SUMMARY:

ARCHITECTURAL STAMPS:
- ☐ IN PROGRESS
- ☐ APPROVED
- ☑ FOR CONSTRUCTION

CITY OF OAKLAND

ARCHITECTURAL STAMPS:

FOR CONSTRUCTION

LICENSED ARCHITECT JOHN GILMORE DEENEMAN C-31147 REN 8/31/2021 STATE OF CALIFORNIA

FOR CONSTRUCTION

FOR CONSTRUCTION

MARK	DESCRIPTION	DATE
8	-	-
7	-	-
6	-	-
5	-	-
4	-	-
3	-	-
2	-	-
1	CHANGE ATM NCR-6688 TO DIEBOLD-7790	08-27-20

EXTERNAL REFERENCES:

PROJECT NAME: BAC CAP OAKLAND IND.CTR. DRIVE UP ISLAND ATM

PROPERTY ID: #: CA2-121

DRAWING DESCRIPTION: ENLARGE - DRIVEWAY PATH

NEW ATM MODEL

1 DU ISL DIEBOLD 7790 ATM WITH TOP

PROJECT No.:	19-1231
DATE:	APRIL 25, 2020
SCALE:	AS NOTED
PROJECT MANAGER:	JR
DRAWN BY:	FJL
CHECKED BY:	JR

SHEET No.: A6.0

SHEET No.: 07 OF 09

DIEBOLD NIXDORF

CALL 1-800-999-3600

L1215 BA

CS 7790 ADVANCED FUNCTION
BANK of AMERICA - DRIVE-UP ISLAND ATM
WITH 13mm CEN L SAFE

DIMENSIONS IN MILLIMETRES (DIMENSIONS IN INCHES)

THIRD ANGLE PROJECTION

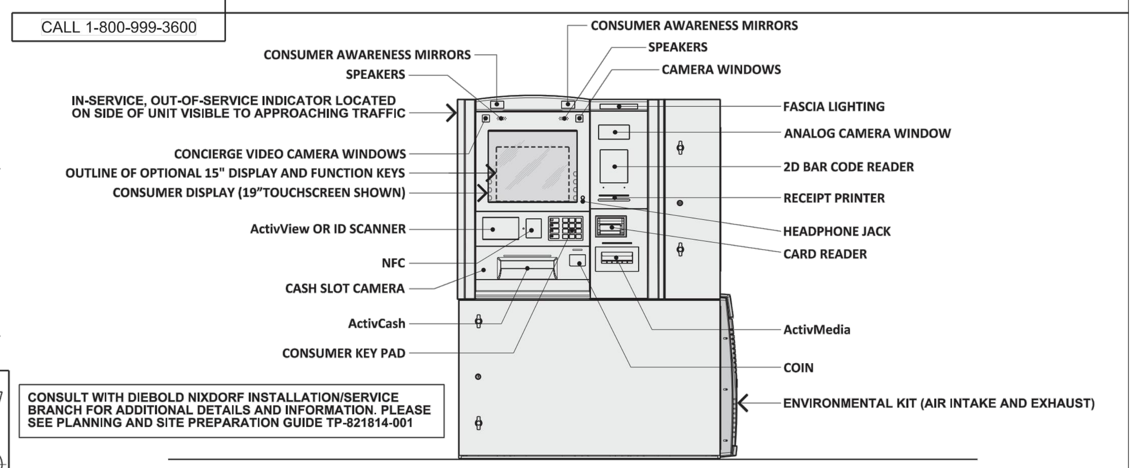

CONSULT WITH DIEBOLD NIXDORF INSTALLATION/SERVICE BRANCH FOR ADDITIONAL DETAILS AND INFORMATION. PLEASE SEE PLANNING AND SITE PREPARATION GUIDE TP-821814-001

FRONT VIEW

Unit to be used in conjunction with:
- FRAME-R-TOP-D7790 (If Specified).
- FRAME-R-UB-DU-D7790

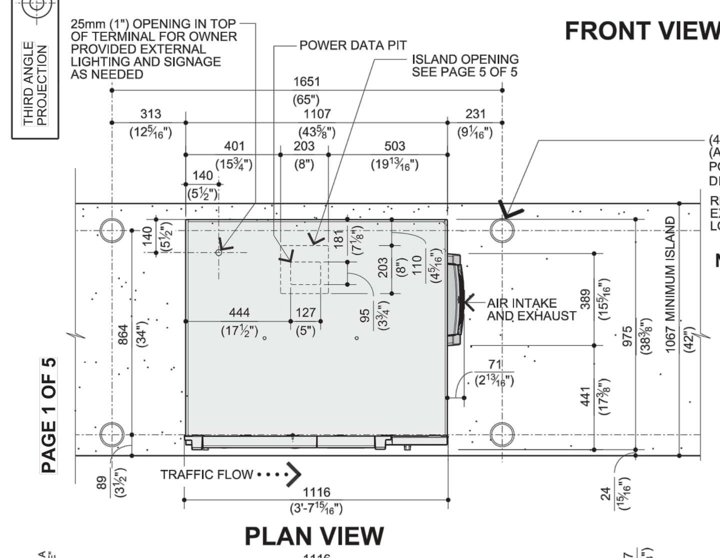

(4) GUARD POST PIPES TO BE 102mm (4") DIA. FILLED WITH CONCRETE (ALL BY OWNER'S GENERAL CONTRACTOR). 00-051019-000C GUARD POST SLEEVE (OPTIONAL EXTRA) SLIPS OVER 102mm (4") TO 114mm (4½") DIA. PIPE. MAXIMUM HEIGHT 1321mm (4'-4")

RECOMMENDED SIZE AND LOCATION FOR NEW CONSTRUCTION. EXISTING GUARD POST MAY OR MAY NOT NEED RELOCATED. LOCATION MUST NOT INTERFERE WITH SERVICE AREA REQUIREMENTS.

NOTE:
DIEBOLD NIXDORF ATMS ARE SPECIFICALLY DESIGNED TO MEET VARIOUS USER CRITERIA FOR DRIVE-UP APPLICATIONS INCLUDING REACH, PRIVACY AND SCREEN VIEW ABILITY.

THE CUSTOMER ACCEPTS ALL RESPONSIBILITY FOR ANY REDUCTION IN USER CONVENIENCE, VISIBILITY AND PRIVACY RISK ISSUES ASSOCIATED WITH USING DIEBOLD NIXDORF ATMS OUTSIDE OF THEIR INTENDED APPLICATIONS.

PAGE 1 OF 5

PLAN VIEW

"ALL DIMENSIONS AND DESIGN CRITERIA SUBJECT TO CHANGE WITHOUT NOTICE"

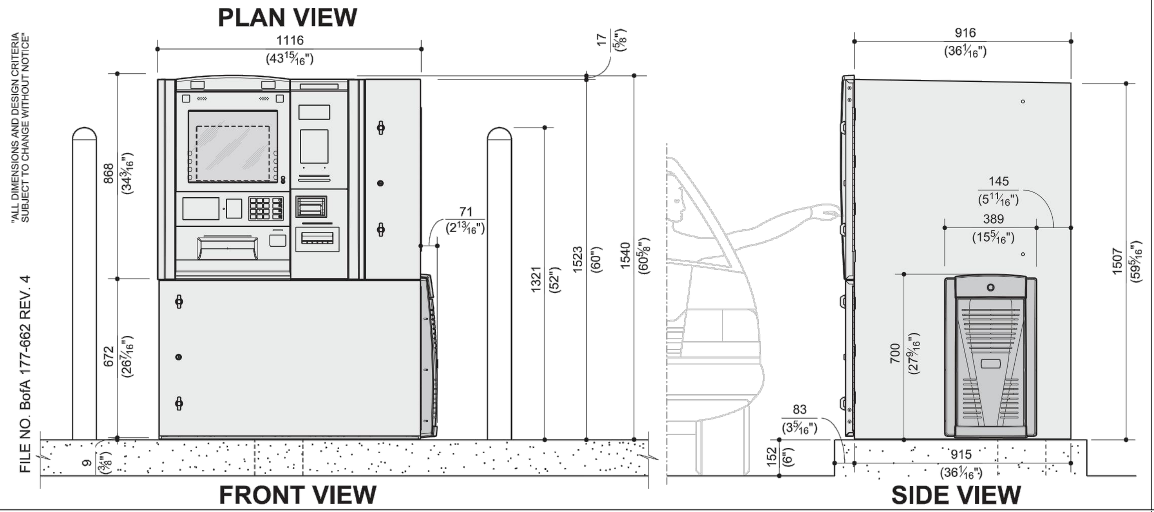

FRONT VIEW **SIDE VIEW**

FILE NO. BofA 177-662 REV. 4

SPECIFICATIONS

POWER REQUIREMENTS:
THE ATM REQUIRES SINGLE-PHASE THREE WIRE UNSWITCHED POWER. WIRING TO THE ATM MUST USE A THIRD-WIRE EARTH GROUND (CONDUIT GROUND IS NOT ACCEPTABLE). THE POWER SUPPLIED MUST BE AS SPECIFIED BELOW.

CHOOSE AND SUPPLY THE PROPER POWER FOR THE SITE:
- ☐ 100-127 VAC (+6%, -10%) AT 50 (±1%) Hz, SINGLE-PHASE
- ☐ 100-127 VAC (+6%, -10%) AT 60 (±1%) Hz, SINGLE-PHASE
- ☐ 200-240 VAC (±10%) AT 50 (±1%) Hz, SINGLE-PHASE
- ☐ 200-240 VAC (±10%) AT 60 (±1%) Hz, SINGLE-PHASE

POWER TO THE ATM IS TO BE A DEDICATED SERVICE AND MUST BE PROTECTED BY A SAFETY QUICK-DISCONNECT DEVICE TO BREAK LINE VOLTAGE (SUCH AS A CIRCUIT BREAKER AT THE ELECTRICAL SERVICE PANEL). THE QUICK DISCONNECT DEVICE (OR CIRCUIT BREAKER) MUST TURN OFF THE LINE VOLTAGE AT THE AMPERAGE SPECIFIED BELOW.
100-127 VAC SERVICE, DISCONNECT AT 30 AMPERES
200-240 VAC SERVICE, DISCONNECT AT 15 AMPERES

POWER USAGE:

MACHINE STATUS	(A)
IDLE (NO TRANSACTION) (NO HEATER)	280 WATTS
IDLE (NO TRANSACTION) (WITH HEATER)	1800 WATTS
CASH DEPOSIT	350 WATTS
CASH DISPENSE	320 WATTS

BAC Standard is 120V, 30A dedicated circuit with isolated ground.

TERMINAL CONFIGURATION:
(A) ActivCore HIGH END, 19" SVD, ActivDispense, ActivMedia, ActivEdge CARD READER, 80mm RECEIPT PRINTER, BATTERY PACK, REAR DISPLAY, JOURNAL PRINTER, CONTACTLESS CARD READER, LOWER CONTROL CARD, 7" DISPLAY, AND TASK LIGHTS.

THE POWER USE DEPENDS ON THE NUMBER AND TYPE OF DEVICES PRESENT IN THE TERMINAL, AND THE TYPE OF TRANSACTION THE TERMINAL IS PERFORMING.

HEAT OUTPUT CONFIGURATION:
(A) 955 - BTU/HR - IDLE (NO HEATER)
6138 - BTU/HR - IDLE (WITH HEATER)
1194 - BTU/HR - CASH DEPOSIT
1092 - BTU/HR - CASH DISPENSE

OPERATING ENVIRONMENT:
-35° C TO 50° C (-31° F TO 122° F)
15% TO 100% RELATIVE HUMIDITY.

NOTE:
IF THE AVERAGE DAILY MAXIMUM TEMPERATURE IN ANY ONE MONTH EXCEEDS 40° C (104° F), THE EXTREME ENVIRONMENTAL KIT (AIR CONDITIONER) IS STRONGLY RECOMMENDED.

CANOPY REQUIREMENT:
IT IS RECOMMENDED THE UNIT BE PLACED UNDER COVER/CANOPY FOR OPERATOR/SERVICE AND SUN PROTECTION.

WEIGHT OF UNIT:
1,293kg (2,850 LBS.)

ALARM PROTECTION:
THE UL-LISTED SAFE IS EQUIPPED WITH A BASIC ALARM SENSOR PACKAGE. THE BASIC PACKAGE INCLUDES A SAFE DOOR OPEN SWITCH, ALARM SHUNTING SWITCH, AND RATE-OF-RISE HEAT SENSOR.

RECOMMENDED ISLAND:
1066mm (3'-6") WIDE X 152mm (6") HIGH X 203mm (8") MIN. THICKNESS

PHYSICAL SECURITY:
CEN L SAFE
THE SAFE MEETS THE REQUIREMENTS FOR EN 1143-1 CEN-L RESISTANCE GRADE FOR ATM SAFES.TO MEET REQUIREMENTS OF CEN L. THE UNIT MUST BE ANCHORED TO A CONCRETE PAD OF 152mm (6") MIN. THICKNESS USING ALL (4) OF THE 203mm (8") LONG WEDGE ANCHORS PROVIDED (DIEBOLD NIXDORF PART NUMBER 29-016376-000E, HILTI PART NUMBER 282520). INSTALL ANCHORS IN ACCORDANCE WITH INSTALLATION TEMPLATE 41-026655 (ALSO PROVIDED).

Regardless if Topper is specified or not, rough-in for Topper power.

Highest Operable Point for this device is 58" about the bottom of the unit, which is 2.75" below the top of the monitor.

CONSUMER ACCESS DIMENSIONS

		HEIGHT	DEPTH
A	TOP OF 19" CONSUMER DISPLAY	1541mm (60$\frac{11}{16}$")	83mm (3¼")
B	BOTTOM OF CONSUMER DISPLAY	1240mm (48$\frac{13}{16}$")	69mm (2¾")
C	ActivView OR ID SCANNER	1127mm (44⅜")	71mm (2$\frac{13}{16}$")
D	EPP KEY	1137mm (44¾")	74mm (2⅞")
E	ActivCash	958mm (37$\frac{11}{16}$")	74mm (2⅞")
F	2D BARCODE SCANNER (OPTION)	1391mm (54¾")	71mm (2$\frac{13}{16}$")
G	RECEIPT PRINTER	1242mm (48$\frac{15}{16}$")	54mm (2⅛")
H	HEADPHONE JACK	1242mm (48$\frac{15}{16}$")	41mm (1⅝")
I	CARD READER	1119mm (44$\frac{1}{16}$")	71mm (2$\frac{13}{16}$")
J	ActivMedia	987mm (38⅞")	41mm (1⅝")
K	COIN	968mm (38⅛")	41mm (1⅝")

HEIGHT - FROM DRIVE LEVEL
DEPTH - FROM FRONT EDGE OF ISLAND

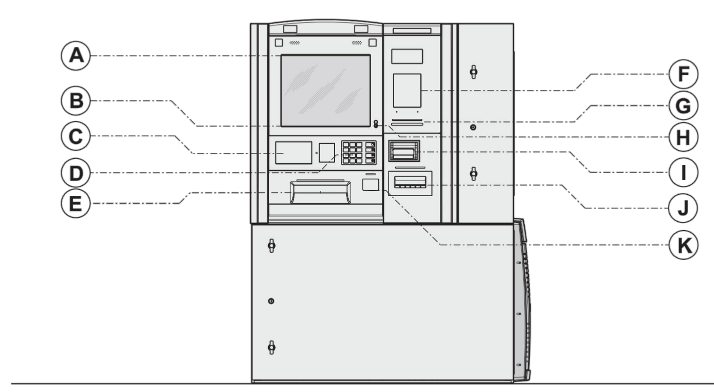

PAGE 2 OF 5

FILE NO. BofA 177-662 REV. 4

DIEBOLD NIXDORF

CALL 1-800-999-3600

CS 7790 ADVANCED FUNCTION
BANK of AMERICA - DRIVE-UP ISLAND ATM
WITH CEN L SAFE

NOTE: PROVIDE EITHER OF THE FOLLOWING FOR LOW-VOLTAGE CABLING (COMMS / ALARM / CAMERA):
- (2) 2" CONDUITS
- (1) 3" CONDUIT

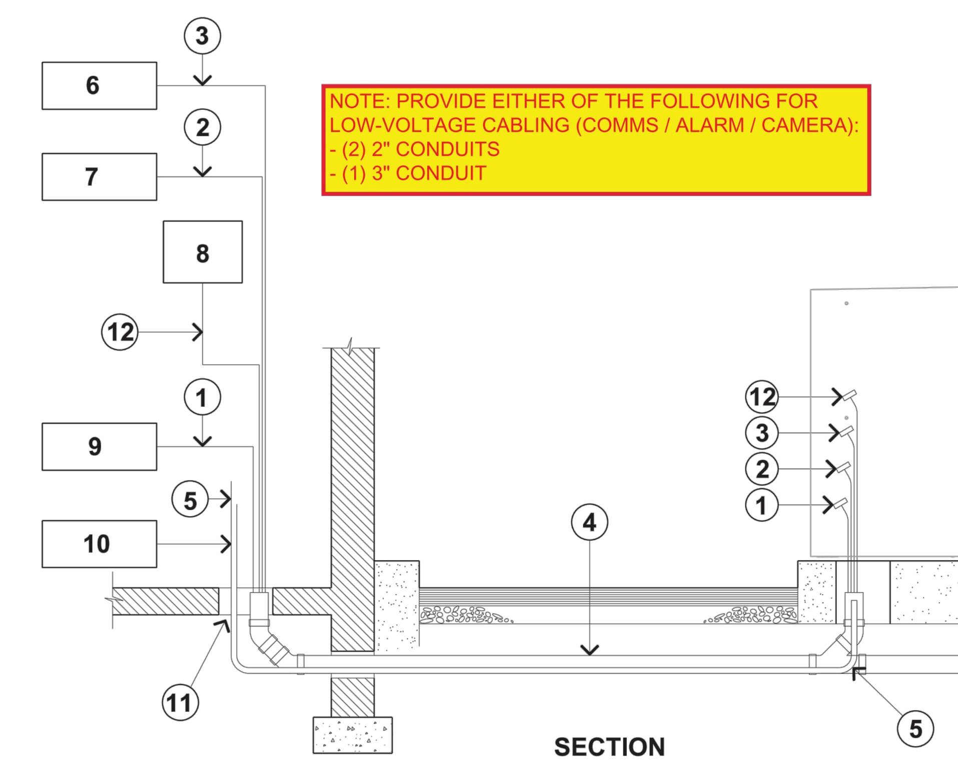

SECTION

1. COMMUNICATIONS CABLE-DIEBOLD TO FURNISH (OPTIONAL AND EXTRA) RJ-45 CABLE TO BE INSTALLED BY THE OWNER.
2. VIDEO SURVEILLANCE SYSTEM CABLE-FURNISHED AND INSTALLED BY OWNER.
3. ALARM CABLE-TO CONFORM TO GRADE A REQUIREMENTS, ALARM CABLE MUST BE HOME RUN FROM THE ATM BACK TO THE ALARM CONTROL CABINET, FURNISHED AND INSTALLED BY OWNER.
4. 102mm (4") DIAMETER PVC PIPE-FURNISHED AND INSTALLED BY OWNER.
5. ELECTRICAL POWER CONDUIT-FURNISHED AND INSTALLED BY OWNER.
6. ALARM.
7. VIDEO SURVEILLANCE SYSTEM.
8. OPTIONAL REMOTE STATUS INDICATOR (RSI).
9. TO NETWORK
10. ELECTRICAL CONDUIT TO BUILDINGS ELECTRICAL PANEL.
11. FLOOR OPENING FOR CABLES (RECOMMENDED TO BE IN THE ELECTRICAL EQUIPMENT ROOM).
12. AFTER HOUR DEPOSITORY CABLING.
13. RSI CABLING - FURNISHED BY DIEBOLD AND INSTALLED BY OWNER.

PAGE 3 OF 5

FILE NO. BofA 177-662 REV. 4

CS 7790 ADVANCED FUNCTION
DRIVE-UP ISLAND ATM
SERVICE POSITION AND SERVICE AREAS

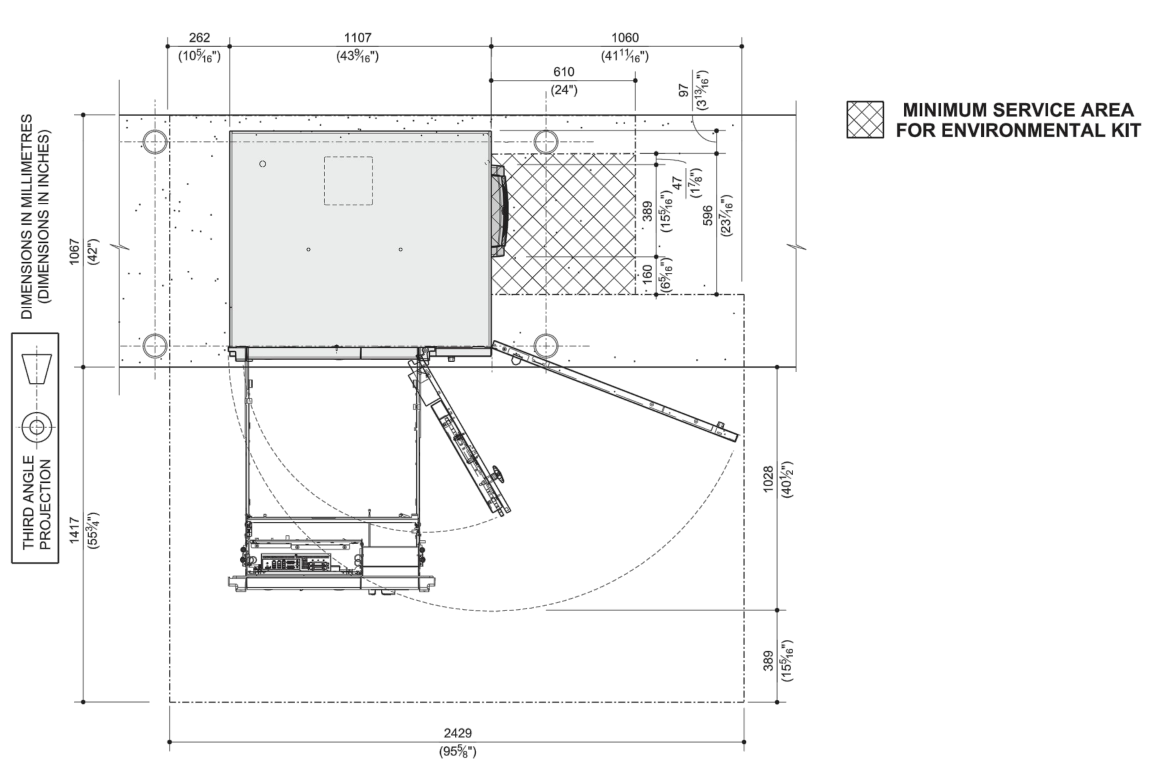

PLAN VIEW
SERVICE AREA

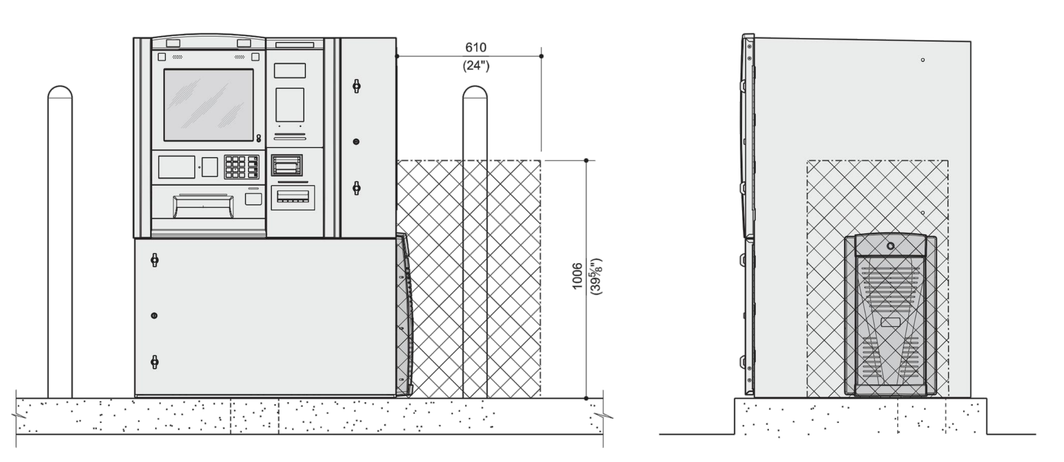

FRONT VIEW **SIDE VIEW**

PAGE 4 OF 5

FILE NO. BofA 177-662 REV. 4

ISLAND REQUIREMENTS

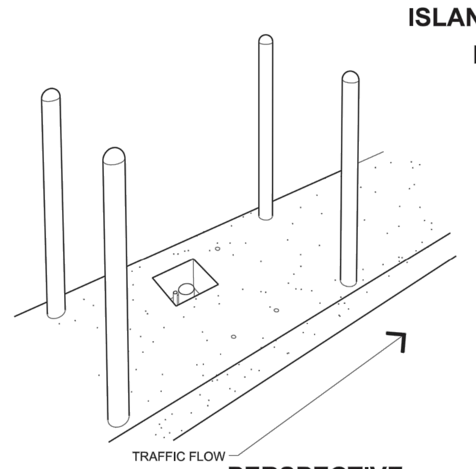

PERSPECTIVE

NOTES:

NEW CONSTRUCTION:
1. OWNER'S E.C. TO FURNISH AND INSTALL (1) 19mm (¾") RIGID CONDUIT FOR ELECTRICAL POWER. (SEE POWER REQUIREMENTS)
2. OWNER'S E.C. TO FURNISH AND INSTALL 102 mm (4") P.V.C. PIPE (RECOMMENDED METHOD FOR ROUTING COMMUNICATION CABLE, EXPRESS BUS CABLE, ALARM CABLE, AND VIDEO CABLE).
   (ALTERNATE METHOD) OWNER'S ELECTRICAL CONTRACTOR TO FURNISH AND INSTALL (1) 25mm (1") RIGID CONDUIT FOR ALARM CABLE AND (1) 38mm (1½") RIGID CONDUIT FOR COMMUNICATION CABLE, EXTERNAL OPTIONS CABLE, AND VIDEO CABLE.
3. PLEASE CONTACT THE DIEBOLD NIXDORF INSTALLING BRANCH IF CONSIDERING ATTACHMENT OF A REMOTE DESKTOP MONITOR/KEYBOARD TO THIS PRODUCT.
4. OWNER'S INSTALLER TO DRILL (4) 19mm (¾") DIA. X 203mm (8" MIN.) DEEP HOLES IN ISLAND CONCRETE SLAB (RECOMMENDED COMPLETELY THROUGH ISLAND SLAB WHEN POSSIBLE) (TEMPLATE PROVIDED FOR LOCATING HOLES, PART NO. 41-026655) AND SECURE UNIT TO ISLAND WITH (4) 19mm (¾")-10 X 203mm (8") LONG WEDGE ANCHORS (DIEBOLD NIXDORF PART NUMBER 29-016376-000E, HILTI PART NUMBER 282520) SUPPLIED WITH UNIT.
6. ISLAND TO BE FLAT AND LEVEL IN AREA OF UNIT.
7. ISLAND CONSTRUCTION MUST SUPPORT WEIGHT OF UNIT 1,293 kg (2,850 LBS.).
8. OWNER'S INSTALLER TO SET LEVEL, SECURE UNIT TO CONCRETE ISLAND AND CAULK AROUND BASE.

EXISTING CONSTRUCTION:
1. EXISTING ELECTRICAL CONDUIT, PNEUMATIC TUBE AND/OR P.V.C. PIPE MUST BE RE-ROUTED TO ALIGN WITH REQUIRED ISLAND OPENING. EXISTING PNEUMATIC TUBE OR P.V.C. PIPE MAY BE USED TO ROUTE COMMUNICATION CABLE, EXPRESS BUS CABLE, ALARM CABLE, AND VIDEO CABLE.
2. EXISTING BUMPER GUARDS ON ISLAND MAY REQUIRE RELOCATION.

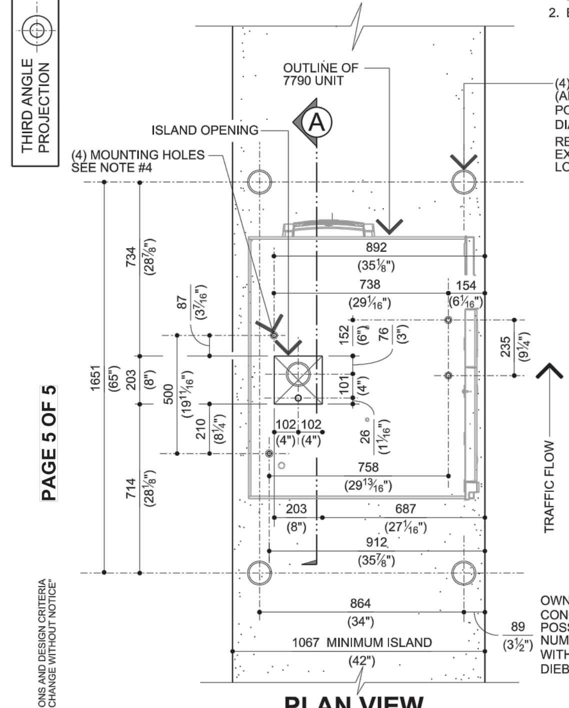

(4) GUARD POST PIPES TO BE 102mm (4") DIA. FILLED WITH CONCRETE (ALL BY OWNER'S GENERAL CONTRACTOR). 00-051019-000C GUARD POST SLEEVE (OPTIONAL EXTRA) SLIPS OVER 102mm (4") TO 114mm (4½") DIA. PIPE. MAXIMUM HEIGHT 1321mm (4'-4").
RECOMMENDED SIZE AND LOCATION FOR NEW CONSTRUCTION. EXISTING GUARD POST MAY OR MAY NOT NEED RELOCATED. LOCATION MUST NOT INTERFERE WITH SERVICE AREA REQUIREMENTS.

Refer to Bank of America standards for Universal Island site-prep details and bollard locations. Details will include pad/pit locations.

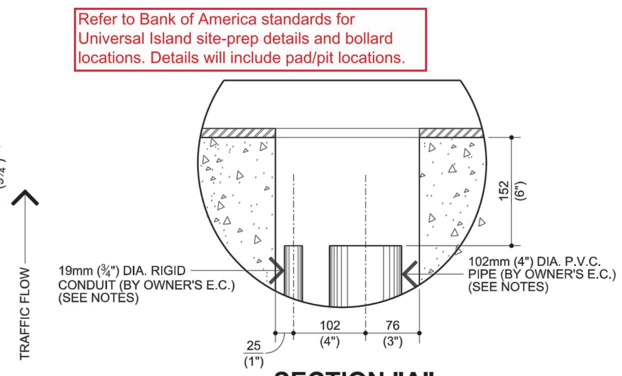

SECTION "A"

PLAN VIEW

OWNER'S INSTALLER TO DRILL (4) 19mm (¾") DIA. X 203mm (8" MIN.) DEEP HOLES IN ISLAND CONCRETE SLAB (RECOMMENDED DRILLING COMPLETELY THROUGH ISLAND SLAB WHEN POSSIBLE (A TEMPLATE USED TO LOCATE THE HOLES, DIEBOLD NIXDORF PART NUMBER 41-026655 IS PROVIDED) AND TO BE SECURED TO THE CONCRETE ISLAND WITH (4) 19mm (¾")-10 X 203mm (8") LONG WEDGE ANCHORS (SUPPLIED WITH UNIT, DIEBOLD NIXDORF PART NUMBER 29-016376-000A, HILTI PART NUMBER 282520).

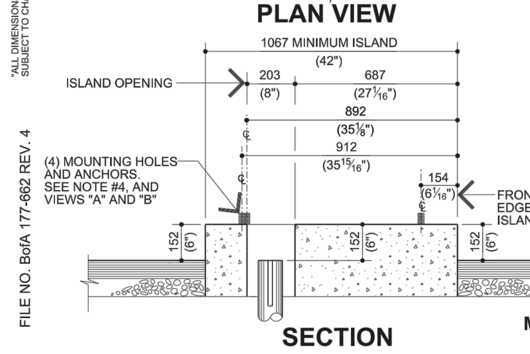

SECTION

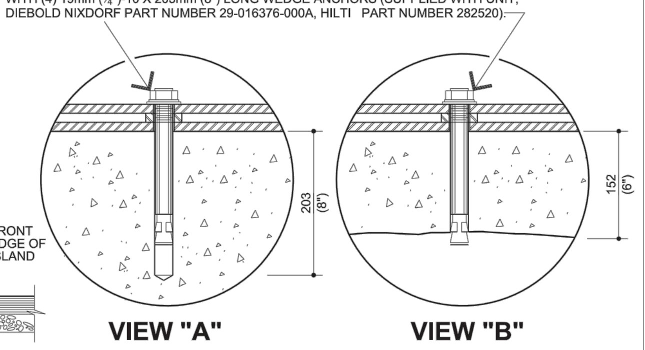

VIEW "A"
MINIMUM HOLE DEPTH 203mm (8")

VIEW "B"
THROUGH HOLE

PAGE 5 OF 5

FILE NO. BofA 177-662 REV. 4

FOR REFERENCE ONLY - ATM BY BANK DIRECT VENDOR, NOT GC.

EXCEL Construction Services, Inc.

Certified WBENC Women's Business Enterprise

1950 Raymer Ave.
Fullerton, CA 92833
www.excelconstruction.biz

CA #852879
AZ #ROC238178
NV #0071254

This drawing is the confidential property of EXCEL CONSTRUCTION SERVICES, INC. and is to be used only by authorized personnel and in the interest of the company. It must be accounted for; shall not be reproduced in whole or in part without prior written permission from EXCEL CONSTRUCTION SERVICES, INC. management, and must be returned to company at any time upon request, but in any event at the completion of the work or job. The recipient agrees to keep confidential, and to require his (its) employees to keep confidential, the information contained hereon. Disclosure of the information contained hereon shall be made only to those persons who require such information for their work on EXCEL CONSTRUCTION SERVICES, INC. projects.

Banck Of America
OAKLAND INDUSTRIAL CENTER
303 Hegenberger Road
Oakland, CA 94621
BAC Property ID: CA4-141

FOR REFERENCE ONLY

STAMPS SUMMARY:

ARCHITECTURAL STAMPS:
- ☐ IN PROGRESS
- ☐ APPROVED
- ☑ FOR CONSTRUCTION

CITY OF OAKLAND

ARCHITECTURAL STAMPS:

FOR CONSTRUCTION

LICENSED ARCHITECT JOHN GILMORE DEENIHAN C-9147 REN 8/31/2021 STATE OF CALIFORNIA

FOR CONSTRUCTION

FOR CONSTRUCTION

MARK	DESCRIPTION	DATE
8	-	-
7	-	-
6	-	-
5	-	-
4	-	-
3	-	-
2	-	-
1	CHANGE ATM NCR-6688 TO DIEBOLD-7790	08-27-20

EXTERNAL REFERENCES:

PROJECT NAME: BAC CAP OAKLAND IND.CTR. DRIVE UP ISLAND ATM

PROPERTY ID: #: CA2-121

DRAWING DESCRIPTION: ATM SPECIFICATIONS

NEW ATM MODEL: DU ISL DIEBOLD 7790 ATM WITH TOP

PROJECT No.:	19-1231
DATE:	APRIL 25, 2020
SCALE:	AS NOTED
PROJECT MANAGER:	JR
DRAWN BY:	FJL
CHECKED BY:	JR

SHEET No.: A12.1

SHEET No.: 08 OF 09

KWIK Bolt TZ Expansion Anchor 3.3.5

3.3.5.1 Product description

The KWIK Bolt TZ (KB-TZ) is a torque controlled expansion anchor which is especially suited to seismic and cracked concrete applications. This anchor line is available in carbon steel, type 304 and type 316 stainless steel versions. The anchor diameters range from 3/8-, 1/2-, 5/8- and 3/4-inch in a variety of lengths. Applicable base materials include normal-weight concrete, structural lightweight concrete, lightweight concrete over metal deck and grout-filled concrete masonry.

Guide specifications

Torque controlled expansion anchors shall be KWIK Bolt TZ (KB-TZ) supplied by Hilti meeting the description in Federal Specification A-A 1923A, type 4. The anchor bears a length identification mark embossed into the impact section (dog point) of the anchor surrounded by four embossed notches identifying the anchor as a Hilti KWIK Bolt TZ. Anchors are manufactured to meet one of the following conditions:

- The carbon steel anchor body, nut, and washer have an electroplated zinc coating conforming to ASTM B633 to a minimum thickness of 5 µm. The stainless steel expansion sleeve conforms to type 316.
- Stainless steel anchor body, nut and washer conform to type 304. Stainless steel expansion sleeve conforms to type 316.
- Stainless steel anchor body, nut, washer, and expansion sleeve conform to type 316 stainless steel.

Product features

- Product and length identification marks facilitate quality control after installation.
- Through fixture installation and variable thread lengths improve productivity and accommodate various base plate thicknesses.
- Type 316 stainless steel wedges provide superior performance in cracked concrete.
- Ridges on expansion wedges provide increased reliability.
- Mechanical expansion allows immediate load application.
- Raised impact section (dog point) prevents thread damage during installation.
- Bolt meets ductility requirements of ACI 318-14 Section 2.3.
- ACI 349-01 Nuclear Design Guide is available. Call Hilti Technical Support.

3.3.5.1 Product description
3.3.5.2 Material specifications
3.3.5.3 Technical data
3.3.5.4 Installation instructions
3.3.5.5 Ordering information

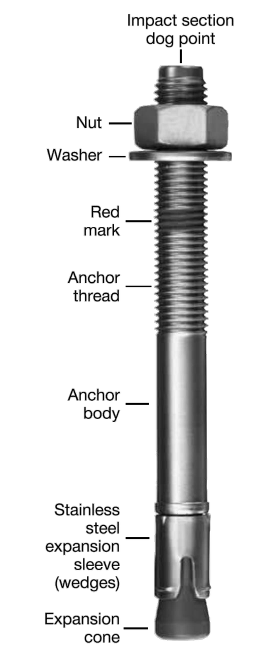

3.3.5

Listings/Approvals

ICC-ES (International Code Council)
ESR-1917, ESR-3785, ESL-1067
City of Los Angeles
Research Report No. 25701
Research Report No. 26057
FM (Factory Mutual)
Pipe Hanger Components for Automatic Sprinkler Systems for 3/8 through 3/4
UL LLC
Pipe Hanger Equipment for Fire Protection Services for 3/8 through 3/4

Independent code evaluation

IBC® / IRC® 2015
IBC® / IRC® 2012
IBC® / IRC® 2009
IBC® / IRC® 2006
National Building Code of Canada 2015
National Building Code of Canada 2010

3.3.5 KWIK Bolt TZ Expansion Anchor

3.3.5.2 Material specifications

Carbon steel with electroplated zinc

Carbon steel KB-TZ anchors have the following minimum bolt fracture loads.[1]

Anchor diameter (in.)	Shear (lb)	Tension (lb)
3/8	NA	6,744
1/2	7,419	11,240
5/8	11,465	17,535
3/4	17,535	25,853

Carbon steel anchor components plated in accordance with ASTM B633 to a minimum thickness of 5 µm.
Nuts conform to the requirements of ASTM A563, Grade A, Hex.
Washers meet the requirements of ASTM F844.
Expansion sleeves (wedges) are manufactured from type 316 stainless steel

Stainless steel

Stainless steel KB-TZ anchors are made of type 304 or 316 material and have the following minimum bolt fracture loads.[1]

Anchor diameter (in.)	Shear (lb)	Tension (lb)
3/8	5,058	6,519
1/2	8,543	12,364
5/8	13,938	19,109
3/4	22,481	24,729

All nuts and washers for type 304 anchors are made from type 304 stainless.
All nuts and washers for type 316 anchors are made from type 316 stainless.
Nuts meet the dimensional requirements of ASTM F594.
Washers meet the dimensional requirements of ANSI B18.22.1, Type A, plain.
Expansion sleeve (wedges) are made from type 316 stainless steel.

1 Bolt fracture loads are determined by testing in a universal tensile machine for quality control at the manufacturing facility. These loads are not intended for design purposes. See tables 4 and 16 for the steel design strengths of carbon steel and stainless steel, respectively.

3.3.5.3 Technical data

3.3.5.3.1 ACI 318-14 Chapter 17 design

The technical data contained in this section are Hilti Simplified Design Tables. The load values were developed using the Strength Design parameters and variables of ESR-1917 and the equations within ACI 318-14 Chapter 17. For a detailed explanation of the Hilti Simplified Design Tables, refer to section 3.1.8. Data tables from ESR-1917 are not contained in this section, but can be found at www.icc-es.org or at www.hilti.com.

KWIK Bolt TZ Expansion Anchor 3.3.5

Table 1 - Hilti KWIK Bolt TZ carbon steel specifications

Setting information	Symbol	Units	3/8			1/2				5/8				3/4			
Nominal anchor diameter d_o			3/8			1/2				5/8				3/4			
Nominal bit diameter	d_{bit}	in.	3/8			1/2				5/8				3/4			
Minimum nominal embedment	h_{nom}	in. (mm)	1-13/16 (46)	2-5/16 (59)	3-1/16 (78)	2-3/8 (60)		3-5/8 (91)		3-9/16 (91)		4-7/16 (113)		3-13/16 (97)	4-5/16 (110)		5-5/16 (135)
Effective minimum embedment	h_{ef}	in. (mm)	1-1/2 (38)	2 (51)	2-3/4 (70)	2 (51)		3-1/4 (83)		3-1/8 (79)		4 (102)		3-1/4 (83)	3-3/4 (95)		4-3/4 (121)
Min. hole depth	h_o	in. (mm)	2 (51)	2-5/8 (67)	3-3/8 (83)	2-5/8 (67)		4 (102)		3-3/4 (95)		4-3/4 (121)		4 (102)	4-5/8 (117)		5-3/4 (146)
Min. thickness of fixture[1]	t_{min}	in. (mm)	0 (0)	0 (0)	0 (0)	3/4 (19)		1/4 (6)		3/8 (9)		3/4 (19)		0 (0)	0 (0)		7/8 (23)
Max. thickness of fixture	t_{max}	in. (mm)	2-13/16 (71)	2-5/16 (59)	1-9/16 (40)	4 (101)		2-3/4 (70)		5-5/8 (143)		4-3/4 (121)		5-9/16 (141)	4-15/16 (125)		3-15/16 (100)
Installation torque (concrete)	T_{inst}	ft-lb (Nm)	25 (34)			40 (54)				60 (81)				110 (149)			
Installation torque (masonry)	T_{inst}	ft-lb (Nm)	n/a	15 (20)	n/a	25 (34)				35 (47)				n/a	70 (95)		
Fixture hole diameter	d_h	in. (mm)	7/16 (11.1)			9/16 (14.3)				11/16 (17.5)				13/16 (20.6)			
Available anchor lengths	ℓ_{anch}	in. (mm)	3 (76)	3-3/4 (95)	5 (127)	3-3/4 (95)	4-1/2 (114)	5-1/2 (140)	7 (178)	4-3/4 (121)	6 (152)	8-1/2 (216)	10 (254)	5-1/2 (140)	7 (178)	8 (203)	10 (254)
Threaded length including dog point	ℓ_{thread}	in. (mm)	1-1/2 (38)	2-1/4 (57)	3-1/2 (89)	1-5/8 (41)	2-3/8 (60)	3-3/8 (86)	4-7/8 (124)	1-1/2 (38)	2-3/4 (70)	5-1/4 (133)	6-3/4 (171)	2-1/2 (63)	4 (103)	5 (128)	7 (179)
Unthreaded length	ℓ_{unthr}	in. (mm)	1-1/2 (39)			2-1/8 (54)				3-1/4 (83)				3 (77)			

1 Minimum thickness of fixture is a concern only when the anchor is installed at the minimum nominal embedment. When KWIK Bolt TZ anchors are installed at this embedment, the anchor threading ends near the surface of the concrete. If the fixture is sufficiently thin, it could be possible to run the nut to the bottom of the threading during application of the installation torque. If fixtures are thin, it is recommended that embedment be increased accordingly.

Figure 1 - Hilti KWIK Bolt TZ specifications

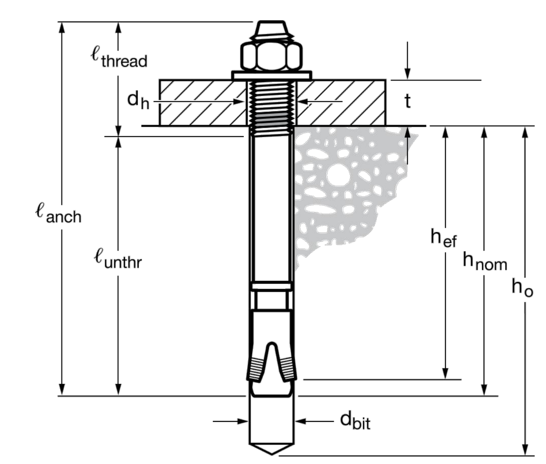

3.3.5

KWIK Bolt TZ Expansion Anchor 3.3.5

Table 4 - Steel strength for Hilti KWIK Bolt TZ carbon steel anchors[1,2]

Nominal anchor diameter in	Effective embedment in. (mm)			Tensile ϕN_{sa} [3] lb (kN)	Shear ϕV_{sa} [4] lb (kN)	Seismic shear $\phi V_{sa,eq}$ [5] lb (kN)
3/8	1-1/2 (38)			4,875 (21.7)	1,415 (6.3)	1,415 (6.3)
3/8	2 (51)	2-3/4 (70)		4,875 (21.7)	2,335 (10.4)	1,465 (6.5)
1/2	2 (51)	3-1/4 (83)		8,030 (35.7)	3,570 (15.9)	3,570 (15.9)
5/8	3-1/8 (79)	4 (102)		12,880 (57.3)	5,260 (23.4)	4,940 (22.0)
3/4	3-1/4 (83)	3-3/4 (95)	4-3/4 (121)	18,840 (83.8)	8,890 (39.5)	7,635 (34.0)

1 See section 3.1.8.6 to convert design strength value to ASD value.
2 Hilti KWIK Bolt TZ carbon steel anchors are to be considered ductile steel elements.
3 Tensile $\phi N_{sa} = \phi A_{se,N} f_{uta}$ as noted in ACI 318-14 Chapter 17.
4 Shear values determined by static shear tests with $\phi V_{sa} < \phi\ 0.60\ A_{se,V} f_{uta}$ as noted in ACI 318-14 Chapter 17.
5 Seismic shear values determined by seismic shear tests with $\phi V_{sa,eq} < \phi\ 0.60\ A_{se,V} f_{uta}$ as noted in ACI 318-14 Chapter 17. See section 3.1.8.7 for additional information on seismic applications.

3.3.5

Figure 2

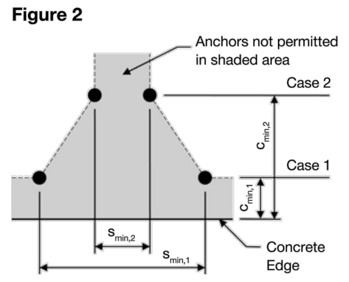

For a specific edge distance, the permitted spacing is calculated as follows:

$$s \geq s_{min,2} + \frac{(s_{min,1} - s_{min,2})}{(c_{min,1} - c_{min,2})}(c - c_{min,2})$$

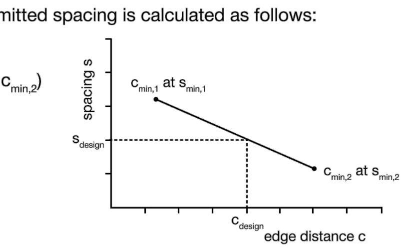

Table 5 - Carbon steel Hilti KWIK Bolt TZ installation parameters[1]

Setting information	Symbol	Units	3/8				1/2				5/8			3/4			
Nominal anchor diameter d_o			3/8				1/2				5/8			3/4			
Effective minimum embedment	h_{ef}	in. (mm)	1-1/2 (38)	2 (51)		2-3/4 (70)	2 (51)		3-1/4 (83)		3-1/8 (79)	4 (102)		3-1/4 (83)	3-3/4 (95)		4-3/4 (121)
Min. member thickness	h_{min}	in. (mm)	3-1/4 (83)	4 (102)	5 (127)	5 (127)	4 (102)	6 (152)	6 (152)	8 (203)	5 (127)	6 (152)	8 (203)	5-1/2 (140)	6 (152)	8 (203)	8 (203)
Case 1	$c_{min,1}$	in. (mm)	8 (203)	2-1/2 (64)		2-1/2 (64)	2-3/4 (70)		2-3/8 (60)		3-5/8 (92)	3-1/4 (83)		9-1/2 (241)	4-3/4 (121)		4-1/8 (105)
Case 1	for $s_{min,1} \geq$	in. (mm)	8 (203)	5 (127)		5 (127)	5-3/4 (146)		5-3/4 (146)		6-1/8 (156)	5-7/8 (149)		5 (127)	10-1/2 (267)		8-7/8 (225)
Case 2	$c_{min,2}$	in. (mm)	8 (203)	3-5/8 (92)		3-5/8 (92)	4-1/8 (105)		3-1/2 (89)		4-3/4 (121)	4-1/4 (108)		9-1/2 (241)	9-1/2 (241)		7-3/4 (197)
Case 2	for $s_{min,2} \geq$	in. (mm)	8 (203)	2-1/2 (64)		2-1/2 (64)	2-3/4 (70)		2-3/8 (60)		3-1/2 (89)	3 (76)		5 (127)	5 (127)		4 (102)

1 Linear interpolation is permitted to establish an edge distance and spacing combination between Case 1 and Case 2. Linear interpolation for a specific edge distance c, where $c_{min,1} < c < c_{min,2}$, will determine the permissible spacings.

3.3.5 KWIK Bolt TZ Expansion Anchor

Table 10 - Load adjustment factors for 5/8-in. diameter carbon steel Hilti KWIK Bolt TZ in uncracked concrete[1,2]

5/8-in. KB-TZ CS uncracked concrete		Spacing factor in tension f_{AN}		Edge distance factor in tension f_{RN}		Spacing factor in shear[3] f_{AV}		Edge distance in shear ⊥ toward edge f_{RV}		Edge distance in shear II to and away from edge f_{RV}		Conc. thickness factor in shear[4] f_{HV}	
Effective embed. h_{ef}	in. (mm)	3-1/8 (79)	4 (102)	3-1/8 (79)	4 (102)	3-1/8 (79)	4 (102)	3-1/8 (79)	4 (102)	3-1/8 (79)	4 (102)	3-1/8 (79)	4 (102)
Nominal embed. h_{nom}	in. (mm)	3-9/16 (90)	4-7/16 (113)	3-9/16 (90)	4-7/16 (113)	3-9/16 (90)	4-7/16 (113)	3-9/16 (90)	4-7/16 (113)	3-9/16 (90)	4-7/16 (113)	3-9/16 (90)	4-7/16 (113)
Spacing (s) / edge distance (c_a) / concrete thickness (h) - in. (mm): 3	(76)	n/a	0.63	n/a	n/a	n/a	0.55	n/a	n/a	n/a	n/a	n/a	n/a
3-1/4	(83)	n/a	0.64	n/a	0.46	n/a	0.55	n/a	0.17	n/a	0.34	n/a	n/a
3-1/2	(89)	0.69	0.65	n/a	0.48	0.57	0.56	n/a	0.19	n/a	0.38	n/a	n/a
3-5/8	(92)	0.69	0.65	0.60	0.48	0.57	0.56	0.28	0.20	0.56	0.40	n/a	n/a
4	(102)	0.71	0.67	0.64	0.51	0.58	0.56	0.32	0.23	0.64	0.47	n/a	n/a
4-1/4	(108)	0.73	0.68	0.67	0.53	0.58	0.57	0.35	0.26	0.67	0.51	n/a	n/a
4-1/2	(114)	0.74	0.69	0.70	0.56	0.59	0.57	0.38	0.28	0.70	0.56	n/a	n/a
4-3/4	(121)	0.75	0.70	0.73	0.58	0.59	0.58	0.42	0.30	0.73	0.58	n/a	n/a
5	(127)	0.77	0.71	0.77	0.60	0.60	0.58	0.45	0.33	0.77	0.60	0.63	n/a
5-1/2	(140)	0.79	0.73	0.85	0.64	0.61	0.59	0.52	0.38	0.85	0.64	0.66	n/a
5-7/8	(149)	0.81	0.74	0.90	0.67	0.62	0.59	0.57	0.42	0.90	0.67	0.68	n/a
6	(152)	0.82	0.75	0.92	0.69	0.62	0.59	0.59	0.43	0.92	0.69	0.69	0.62
6-1/8	(156)	0.83	0.76	0.94	0.70	0.62	0.60	0.61	0.44	0.94	0.70	0.69	0.62
8	(203)	0.93	0.83	1.00	0.91	0.66	0.63	0.91	0.66	1.00	0.91	0.79	0.71
10	(254)	1.00	0.92		1.00	0.70	0.66	1.00	0.92		1.00	0.89	0.80
12	(305)		1.00			0.74	0.69		1.00			0.97	0.87
14	(356)					0.77	0.72					1.00	0.94
16	(406)					0.81	0.75						1.00
18	(457)					0.85	0.78						
20	(508)					0.89	0.82						
22	(559)					0.93	0.85						
> 24	(610)					0.97	0.88						

Table 11 - Load adjustment factors for 5/8-in. diameter carbon steel Hilti KWIK Bolt TZ in cracked concrete[1,2]

5/8-in. KB-TZ CS cracked concrete		Spacing factor in tension f_{AN}		Edge distance factor in tension f_{RN}		Spacing factor in shear[3] f_{AV}		Edge distance in shear ⊥ toward edge f_{RV}		Edge distance in shear II to and away from edge f_{RV}		Conc. thickness factor in shear[4] f_{HV}	
Effective embed. h_{ef}	in. (mm)	3-1/8 (79)	4 (102)	3-1/8 (79)	4 (102)	3-1/8 (79)	4 (102)	3-1/8 (79)	4 (102)	3-1/8 (79)	4 (102)	3-1/8 (79)	4 (102)
Nominal embed. h_{nom}	in. (mm)	3-9/16 (90)	4-7/16 (113)	3-9/16 (90)	4-7/16 (113)	3-9/16 (90)	4-7/16 (113)	3-9/16 (90)	4-7/16 (113)	3-9/16 (90)	4-7/16 (113)	3-9/16 (90)	4-7/16 (113)
Spacing (s) / edge distance (c_a) / concrete thickness (h) - in. (mm): 3	(76)	n/a	0.63	n/a	n/a	n/a	0.55	n/a	n/a	n/a	n/a	n/a	n/a
3-1/4	(83)	n/a	0.64	n/a	0.66	n/a	0.55	n/a	0.17	n/a	0.35	n/a	n/a
3-1/2	(89)	0.69	0.65	n/a	0.69	0.57	0.56	n/a	0.19	n/a	0.39	n/a	n/a
3-5/8	(92)	0.69	0.65	0.83	0.71	0.57	0.56	0.28	0.20	0.56	0.41	n/a	n/a
4	(102)	0.71	0.67	0.89	0.75	0.58	0.56	0.33	0.24	0.65	0.47	n/a	n/a
4-1/4	(108)	0.73	0.68	0.93	0.78	0.58	0.57	0.36	0.26	0.71	0.52	n/a	n/a
4-1/2	(114)	0.74	0.69	0.97	0.81	0.59	0.57	0.39	0.28	0.78	0.56	n/a	n/a
4-3/4	(121)	0.75	0.70	1.00	0.84	0.59	0.58	0.42	0.31	0.84	0.61	n/a	n/a
5	(127)	0.77	0.71		0.87	0.60	0.58	0.45	0.33	0.91	0.66	0.63	n/a
5-1/2	(140)	0.79	0.73		0.93	0.61	0.59	0.52	0.38	1.00	0.76	0.66	n/a
5-7/8	(149)	0.81	0.74		0.98	0.62	0.59	0.58	0.42		0.84	0.68	n/a
6	(152)	0.82	0.75		1.00	0.62	0.60	0.60	0.43		0.87	0.69	0.62
6-1/8	(156)	0.83	0.76			0.62	0.60	0.62	0.45		0.89	0.69	0.62
8	(203)	0.93	0.83			0.66	0.63	0.92	0.67		1.00	0.79	0.71
10	(254)	1.00	0.92			0.70	0.66	1.00	0.93			0.89	0.80
12	(305)		1.00			0.74	0.69		1.00			0.97	0.87
14	(356)					0.78	0.72					1.00	0.94
16	(406)					0.82	0.75						1.00
18	(457)					0.85	0.79						
20	(508)					0.89	0.82						
22	(559)					0.93	0.85						
> 24	(610)					0.97	0.88						

1 Linear interpolation not permitted.
2 When combining multiple load adjustment factors (e.g. for a 4 anchor pattern in a corner with thin concrete member) the design can become very conservative. To optimize the design, use Hilti PROFIS Anchor Design software or perform anchor calculation using design equations from ACI 318-14 Chapter 17.
3 Spacing factor reduction in shear, f_{AV}, assumes an influence of a nearby edge. If no edge exists, then $f_{AV} = f_{AN}$.
4 Concrete thickness reduction factor in shear, f_{HV}, assumes an influence of a nearby edge. If no edge exists, then $f_{HV} = 1.0$.
If a reduction factor value is in a shaded cell, this indicates that this specific edge distance may not be permitted with a certain spacing (or vice versa). Check with table 5 and figure 2 of this section to calculate permissable edge distance, spacing and concrete thickness combinations.

KWIK Bolt TZ Expansion Anchor 3.3.5

Figure 7 – Acceptable locations (shaded areas) for Hilti KWIK Bolt TZ anchors in grout-filled concrete masonry

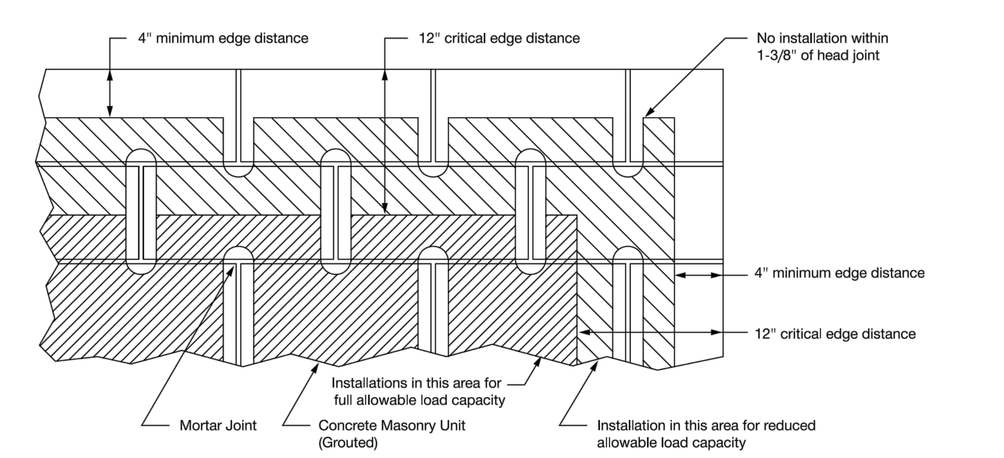

Anchor installation is restricted to shaded areas

3.3.5

Table 47 - Alternative basic load combination adjustment factors under the 2009 or 2006 IBC[1,2,3]

Modification factor for alternate basic load combinations		Modification factor for allowable loads for short-term loading conditions	
Tension	Shear	Tension	Shear
0.75	0.75	1.33	1.33

1 When using the basic load combinations in accordance with IBC Section 1605.3.1, allowable loads must not be increased for wind or seismic loading.
2 When using the alternative basic load combinations in the 2009 or 2006 IBC Section 1605.3.2 that include wind or seismic loads, the allowable loads for anchors may be increased by the tabulated factors found in the right half of the table. Alternatively, the basic load combinations may be reduced by multiplying them by the factors found on the left half of the table. For example, the alternate basic loads for wind or seismic loading may be multiplied by 0.75 or divided by 1.33, as applicable. For the 2015 and 2012 IBC, the allowable loads or load combinations must not be adjusted.
3 The above modification factors are applicable under the 2009 or 2006 IBC only, for Tables 45 and 46 for seismic and wind loads.

FOR REFERENCE ONLY - ATM BY BANK DIRECT VENDOR, NOT GC.

SHEET NOTES

(1) ATM SECURITY ANCHOR BOLTS; HILTI KB-TZ

EXCEL Construction Services, Inc.

Certified WBENC Women's Business Enterprise

1950 Raymer Ave.
Fullerton, CA 92833
www.excelconstruction.biz

CA #852879
AZ #ROC238178
NV #0071254

This drawing is the confidential property of EXCEL CONSTRUCTION SERVICES, INC. and is to be used only by authorized personnel and in the interest of the company. It must be accounted for; shall not be reproduced in whole or in part without prior written permission from EXCEL CONSTRUCTION SERVICES, INC. management, and must be returned to company at any time upon request, but in any event at the completion of the work or job. The recipient agrees to keep confidential, and to require his (its) employees to keep confidential, the information contained hereon. Disclosure of the information contained hereon shall be made only to those persons who require such information for their work on EXCEL CONSTRUCTION SERVICES, INC. projects.

Banck Of America
OAKLAND INDUSTRIAL CENTER
303 Hegenberger Road
Oakland, CA 94621
BAC Property ID: CA4-141

FOR REFERENCE ONLY

STAMPS SUMMARY:

ARCHITECTURAL STAMPS:

- ☐ IN PROGRESS
- ☐ APPROVED
- ☑ FOR CONSTRUCTION

CITY OF OAKLAND

ARCHITECTURAL STAMPS:

FOR CONSTRUCTION

LICENSED ARCHITECT
JOHN GILMORE DEENIHAN
C-9147
REN 8/31/2021
STATE OF CALIFORNIA

FOR CONSTRUCTION

FOR CONSTRUCTION

MARK	DESCRIPTION	DATE
8	-	-
7	-	-
6	-	-
5	-	-
4	-	-
3	-	-
2	-	-
1	CHANGE ATM NCR-6688 TO DIEBOLD-7790	08-27-20

EXTERNAL REFERENCES:

PROJECT NAME: BAC CAP OAKLAND IND.CTR. DRIVE UP ISLAND ATM
PROPERTY ID: #: CA2-121

DRAWING DESCRIPTION: ATM SECURITY BOLT DATA

NEW ATM MODEL: DU ISL DIEBOLD 7790 ATM WITH TOP

PROJECT No.:	19-1231
DATE:	APRIL 25, 2020
SCALE:	AS NOTED
PROJECT MANAGER:	JR
DRAWN BY:	FJL
CHECKED BY:	JR

SHEET No.: A12.2

SHEET No.: 09 OF 09

NOTES:
1.) ALL TRANSLUCENT VINYL TO BE COVERED W/ 3M #3660M MATTE OVERLAMINATE.

ALUM. CLADDING IS PAINTED MAP #MP49696 'RED' W/ FINE STIPPLE FINISH ON ALL EXPOSED SURFACES

ALUM. PIANO HINGE CONTINUOUS ACROSS TOP PAINTED MAP #49696 'RED' W/ FINE STIPPLE FINISH
-SET PIANO HINGE IN 1" ON EACH SIDE

3/1 PLAN VIEW
1" = 1' - 0"

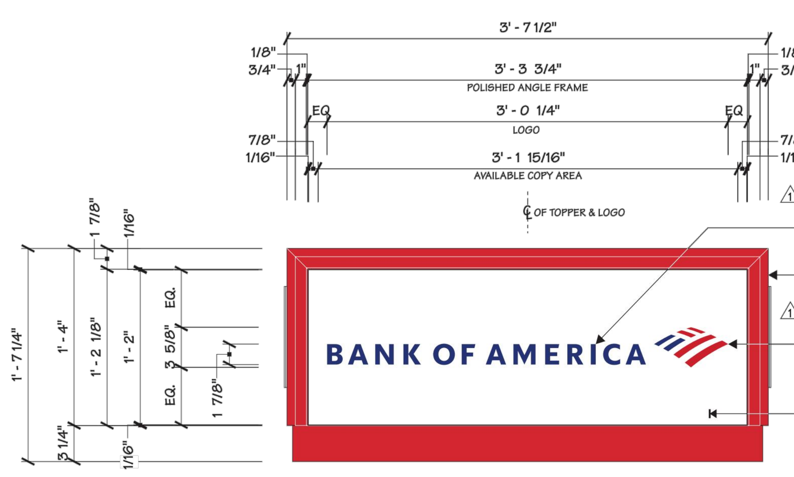

3/8" POCKET ROUTED CLEAR GLOSS ACRYLIC WORDMARK W/ #2050 'BLUE' ACRYLIC GLUED TO SURFACE

.090" FABRICATED ALUM. FRAME PAINTED MAP #MP49696 'RED' W/ FINE STIPPLE FINISH ON ALL EXPOSED SURFACES

3/8" POCKET ROUTED CLEAR GLOSS ACRYLIC FLAGSCAPE W/ #2050 'BLUE' & #2793 'RED' ACRYLIC GLUED TO SURFACE

1/8" ALUM. FACE PAINTED MAP 'GARBO SILVER' FULL GLOSS W/ CLEAR GLOSS COAT W/ ROUTED OUT GRAPHICS

STAINLESS STEEL DOUBLE BITTED CAMLOCK (COMPX #29058)

1/1 FRONT ELEVATION
1" = 1' - 0"

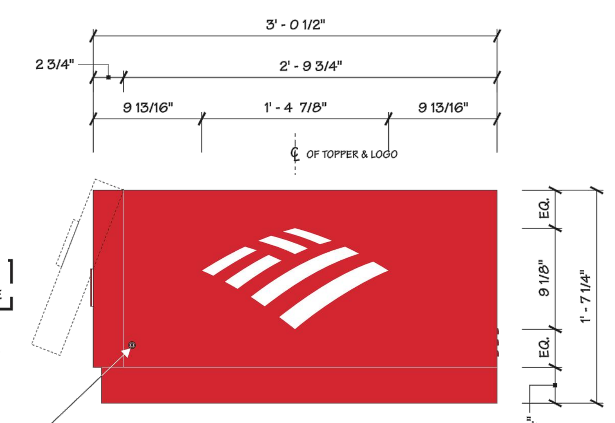

2/1 SIDE VIEW
1" = 1' - 0"

AGI	
Project Title	BANK OF AMERICA
Date	02.05.19
AGI EoR	M. SMITH
Lead Drafter	DLR
Drawn By	BMA/DLR
Project Mgr.	J. DARDEN

General Sign Specifications
- ■ Interior ☐ Exterior
- ■ Single Faced ☐ Double Faced
- ☐ ____
- ☐ Non-Illuminated
- ■ Illuminated
- 120 Volts ____ Amps(+/-)
- Location ____
- Windload ____

Drawing Revisions

Drawn By	Date	Change
DLR	02.20.19	CHANGED PUSH THRU FROM 1/2" TO 3/8"

This document is the sole property of Architectural Graphics, Inc., and all design, manufacturing, reproduction, use and sale rights regarding the same are expressly forbidden. It is submitted under a confidential relationship, for a special purpose, and the recipient, by accepting this document assumes custody and agrees that this document will not be copied or reproduced in whole or in part, nor its contents revealed in any manner or to any person except for the purpose for which it was tendered, nor any special features peculiar to this design be incorporated in other projects.

Code 34602	Type C
Sign Type FRAME-R-TOP-NG-3.0 DIEBOLD 7790	PG #: 1

2655 International Parkway
Virginia Beach, VA 23452

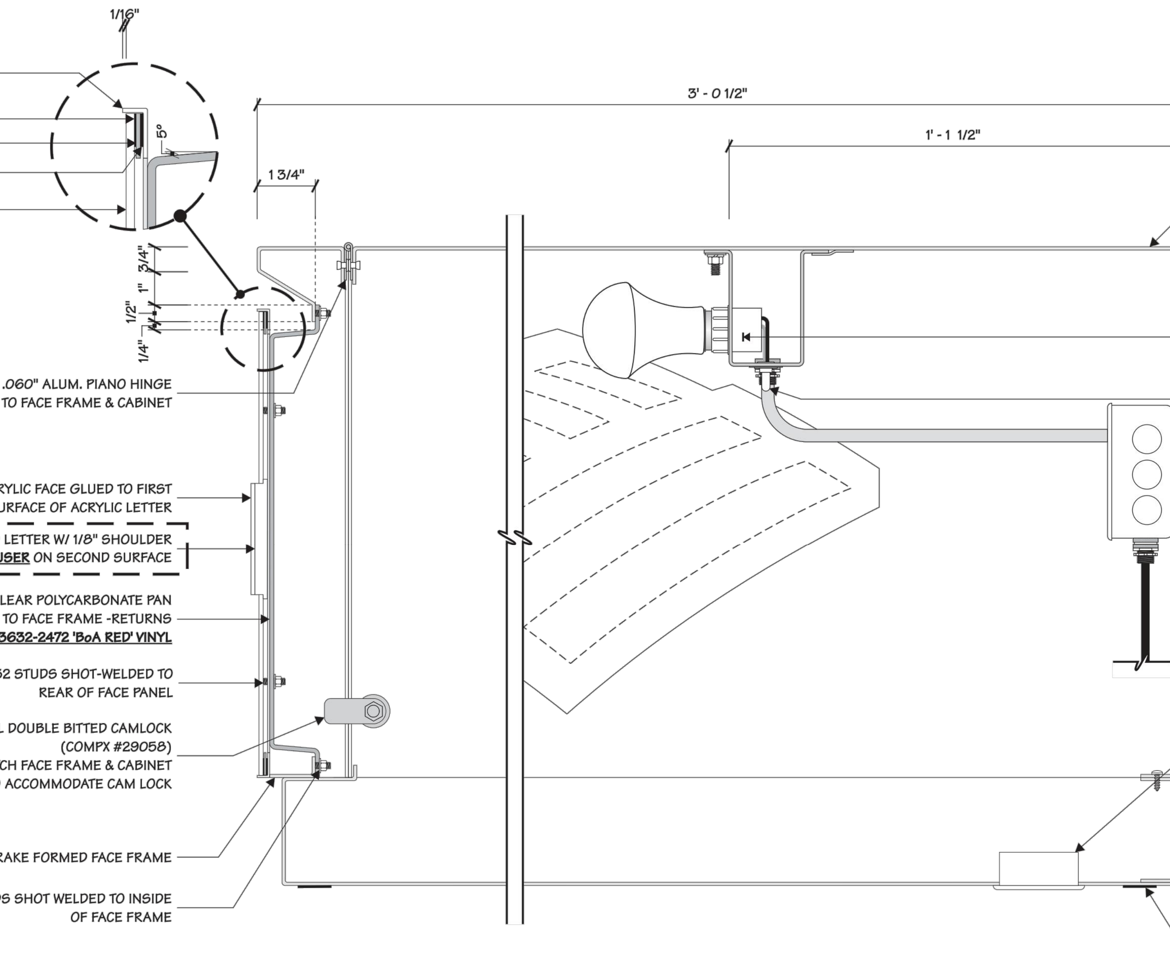

.063 POLISHED 3/8" X 3/4" ALUM ANGLE W/ BRIGHT DIP FINISH
.025 X 1/2" WIDE #4929 VHB TAPE
.063 ALUM. FRAME
.045 X 1/2" WIDE #4950 VHB TAPE
1/8" ALUM FACE

2" OPEN WIDTH X .060" ALUM. PIANO HINGE POP RIVETED TO FACE FRAME & CABINET

.118" ACRYLIC FACE GLUED TO FIRST SURFACE OF ACRYLIC LETTER

3/8" CLEAR POCKET ROUTED LETTER W/ 1/8" SHOULDER W/ 3M #3635-70 DIFFUSER ON SECOND SURFACE

1/8" FORMED CLEAR POLYCARBONATE PAN FASTENED TO FACE FRAME -RETURNS DECORATED W #3632-2472 'BoA RED' VINYL

#10-32 STUDS SHOT-WELDED TO REAR OF FACE PANEL

STAINLESS STEEL DOUBLE BITTED CAMLOCK (COMPX #29058)
-NOTCH FACE FRAME & CABINET TO ACCOMMODATE CAM LOCK

.090" BRAKE FORMED FACE FRAME

#10 STUDS SHOT WELDED TO INSIDE OF FACE FRAME

.090 ALUM. CLADDING FORM

SCREW-IN ALUM. SHELL BULB SOCKET (N. GLANTZ #RW61)
- (4) REQ'D PER CABINET

DISCONNECT SWITCH @ BOTTOM OF BRAKE FORMED RACEWAY

2 GANG OUTLET BOX

.090" ALUM. BACK PANEL W/ STAMPED LOUVERED AIR VENTS

ALUM. MESH BUG SCREEN GLUED TO INSIDE OF CABINET

2 3/8"Ø SNAP-IN FLEXIBLE CABLE GROMMET, (CABLEORGANIZERS.COM) PART #MT-00209

.090" ALUM BASE MECHANICALLY FASTENED TO ALUM. CLADDING W/ #8 S.S.P.H SHEET METAL SCREWS

3M #4950 VHB TAPE APPLIED TO PERIMETER OF TOPPER BASE W/ ADDITIONAL STRIPS RUNNING DOWN THE CENTER AS REQ'D

1/2 SIDE SECTION
1/4" = 1"

AGI
Project Title BANK OF AMERICA
Date 02.05.19
AGI EoR M. SMITH Lead Drafter DLR Drawn By BMA/DLR Project Mgr. J. DARDEN
Code 34602 Type C
Sign Type FRAME-R-TOP-NG-3.0 DIEBOLD 7790
PG #: 2

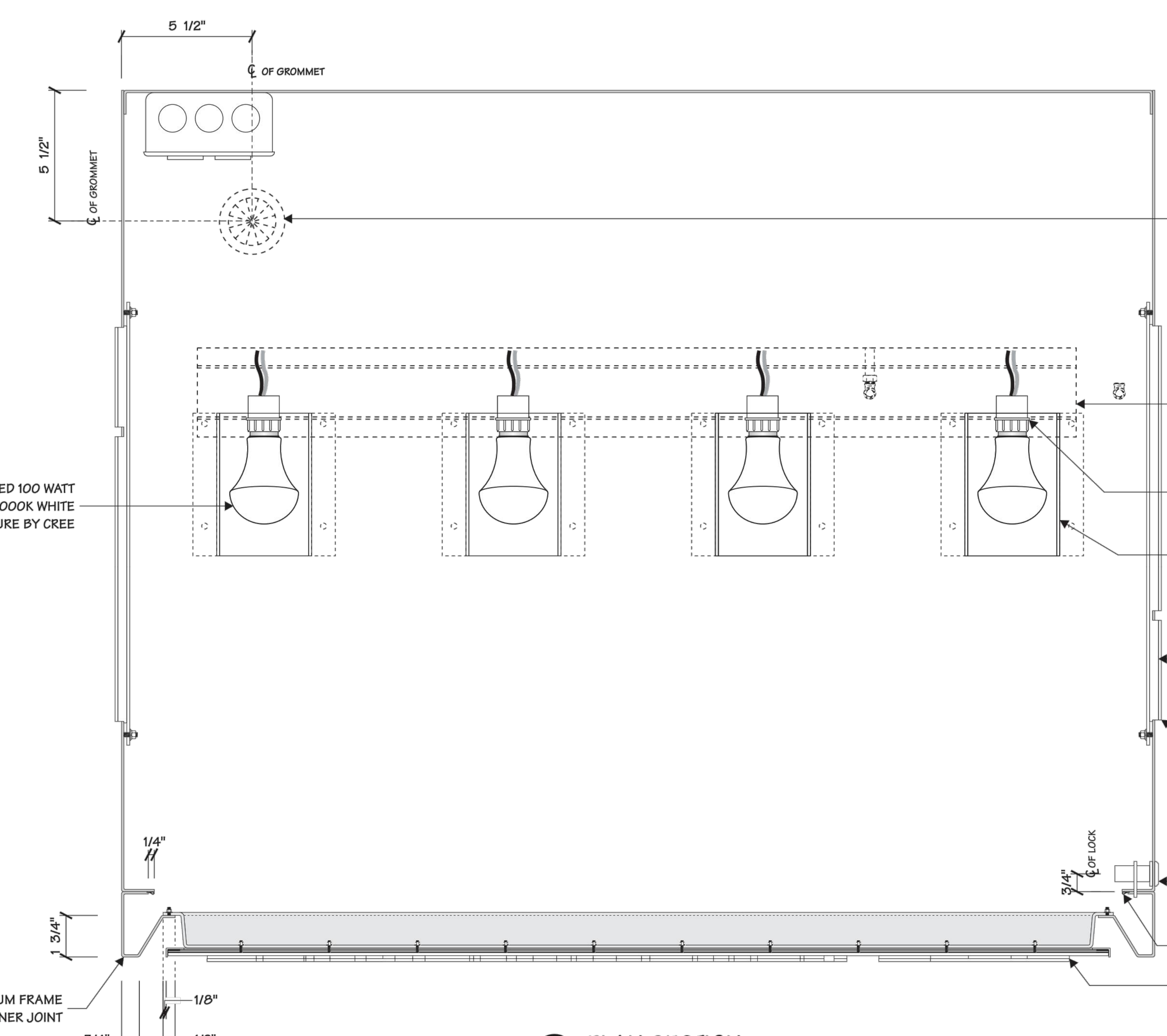

2 3/8"Ø SNAP-IN FLEXIBLE CABLE GROMMET, (CABLEORGANIZERS.COM) PART #MT-00209

LIGHT SOURCE TO BE 4 LED 100 WATT EQUIVALENT BULBS. 5000K WHITE COLOR TEMPERATURE BY CREE

.063" BRAKE FORMED ALUM. RACEWAY @ TOP OF CABINET
W/ CLOSED ENDS FOR LIGHT SOCKETS
-DISCONNECT SWITCH @ BOTTOM

SCREW-IN ALUM. SHELL BULB SOCKET (N. GLANTZ #Rw61)
- (4) REQ'D PER CABINET

(4) 1/8" BRAKE FORMED CLEAR POLYCARBONATE LENS TO PREVENT DAMAGE TO LAMPS - SECURE TO INSIDE OF CABINET W/ 1/4" STUDS

3/8" CLEAR POCKET ROUTED FLAGSCAPE W/ 1/8" SHOULDER & 3M #3635-70 DIFFUSER ON SECOND SURFACE & BACKED W/ 1/8" 'CLEAR' ACRYLIC

.118" 7328 WHITE ACRYLIC FACE GLUED TO FIRST SURFACE OF ACRYLIC FLAGSCAPE

STAINLESS STEEL DOUBLE BITTED CAMLOCK (COMPX #29058)
-NOTCH FACE FRAME & CABINET TO ACCOMMODATE CAM LOCK

TEARDROP GASKET

3/8" CLEAR POCKET ROUTED LETTER W/ 1/8" SHOULDER

.090" BRAKE FORMED ALUM FRAME
- FULLY FINISH CORNER JOINT

1/3 PLAN SECTION
3/16" = 1"

AGI
Project Title BANK OF AMERICA
Date 02.05.19
AGI EoR M. SMITH Lead Drafter DLR Drawn By BMA/DLR Project Mgr. J. DARDEN
Code 34602 Type C
Sign Type FRAME-R-TOP-NG-3.0 DIEBOLD 7790
PG #: 3

NOTES:
1.) PAINT INTERIOR SURFACES OF TOPPER SPRAYLAT STARBRITE WHITE LIGHT ENHANCEMENT PAINT.

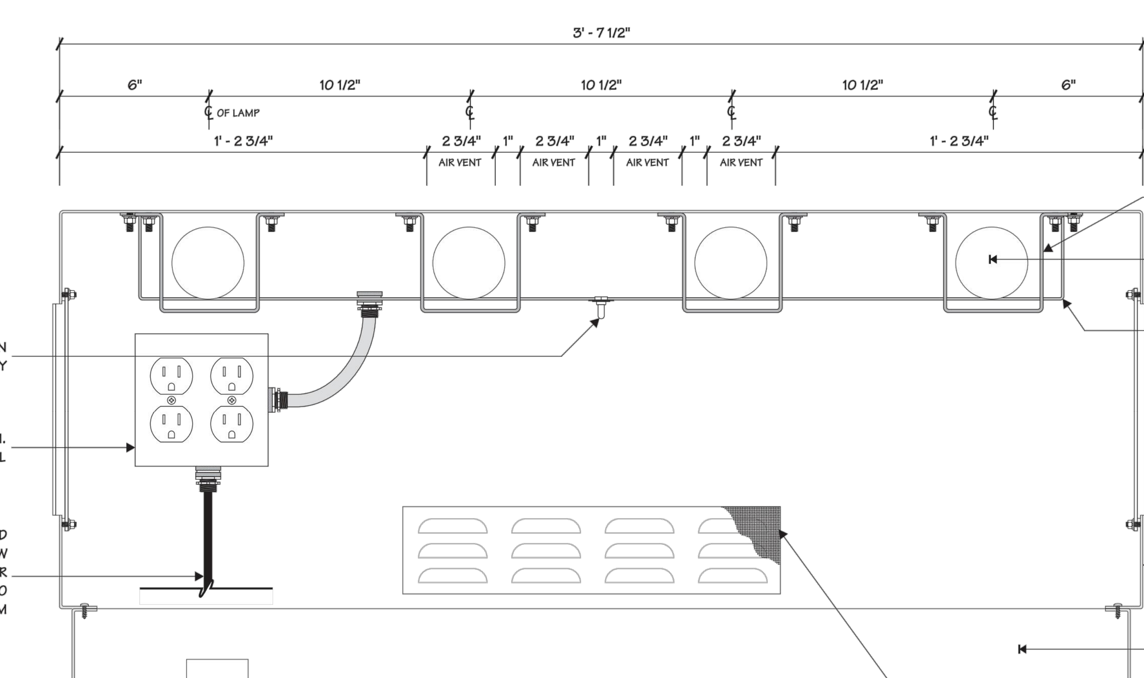

DISCONNECT SWITCH HOUSED IN BRAKE FORMED RACEWAY

2 GANG J-BOX SECURED TO ALUM. BACKER PANEL

3 CONDUCTOR POWER CORD
- 14 GA 3/C SJOOW
@ 4'-0" LENGTH OUTSIDE OF TOPPER
- PROVIDE EXTRA CORD-GRIP TO ATTACH TO J-BOX INSIDE OF ATM

1/8" BRAKE FORMED CLEAR POLYCARBONATE LENS

(4) LIGHT SOURCE TO BE 4 LED 100 WATT EQUIVALENT BULBS 5000K WHITE COLOR TEMPERATURE

.063" BRAKE FORMED ALUM. RACEWAY (W/ CLOSED ENDS) FOR LIGHT SOCKET & DISCONNECT SWITCH
- SECURED TO INSIDE OF CABINET W/ STUDS

.090" ROUTED ALUM. CABINET W/ ALL INTERIOR SURFACES W/ LIGHT ENHANCEMENT PAINT

.090" ALUM. BACK PANEL W/ STAMPED LOUVERED AIR VENTS

ALUM. MESH BUG SCREEN GLUED TO INSIDE OF CABINET

1/4 ELECTRICAL LAYOUT
3/16" = 1"

AGI
Project Title BANK OF AMERICA
Date 02.05.19
AGI EoR M. SMITH Lead Drafter DLR Drawn By BMA/DLR Project Mgr. J. DARDEN
Code 34602 Type C
Sign Type FRAME-R-TOP-NG-3.0 DIEBOLD 7790
PG #: 4

FOR REFERENCE ONLY - ATM BY BANK DIRECT VENDOR, NOT GC.

EXCEL Construction Services, Inc.
Certified WBENC Women's Business Enterprise
1950 Raymer Ave.
Fullerton, CA 92833
www.excelconstruction.biz

CA #852879
AZ #ROC238178
NV #0071254

This drawing is the confidential property of EXCEL CONSTRUCTION SERVICES, INC. and is to be used only by authorized personnel and in the interest of the company. It must be accounted for; shall not be reproduced in whole or in part without prior written permission from EXCEL CONSTRUCTION SERVICES, INC. management, and must be returned to company at any time upon request, but in any event at the completion of the work or job. The recipient agrees to keep confidential, and to require his (its) employees to keep confidential, the information contained hereon. Disclosure of the information contained hereon shall be made only to those persons who require such information for their work on EXCEL CONSTRUCTION SERVICES, INC. projects.

Banck Of America
OAKLAND INDUSTRIAL CENTER
303 Hegenberger Road
Oakland, CA 94621
BAC Property ID: CA4-141

FOR REFERENCE ONLY

STAMPS SUMMARY:

ARCHITECTURAL STAMPS:
- ☐ IN PROGRESS
- ☐ APPROVED
- ☑ FOR CONSTRUCTION

CITY OF OAKLAND

ARCHITECTURAL STAMPS:

FOR CONSTRUCTION

LICENSED ARCHITECT JOHN GILMORE DEENIHAN C-9147 REN 8/31/2021 STATE OF CALIFORNIA

FOR CONSTRUCTION:

FOR CONSTRUCTION

MARK	DESCRIPTION	DATE
8	-	-
7	-	-
6	-	-
5	-	-
4	-	-
3	-	-
2	-	-
1	CHANGE ATM NCR-6688 TO DIEBOLD-7790	08-27-20

EXTERNAL REFERENCES:

PROJECT NAME:
BAC CAP OAKLAND IND.CTR.
DRIVE UP ISLAND ATM

PROPERTY ID:
#: CA2-121

DRAWING DESCRIPTION:
ATM FRAME - TOPPER

NEW ATM MODEL
DU ISL DIEBOLD 7790 ATM WITH TOP

PROJECT No.:	19-1231
DATE:	APRIL 25, 2020
SCALE:	AS NOTED
PROJECT MANAGER:	JR
DRAWN BY:	FJL
CHECKED BY:	JR

SHEET No.:
A13.1

SHEET No.: 09 OF 09