# OAKLAND RENTAL CAR CENTER IMPROVEMENTS
# OAKLAND INTERNATIONAL AIRPORT

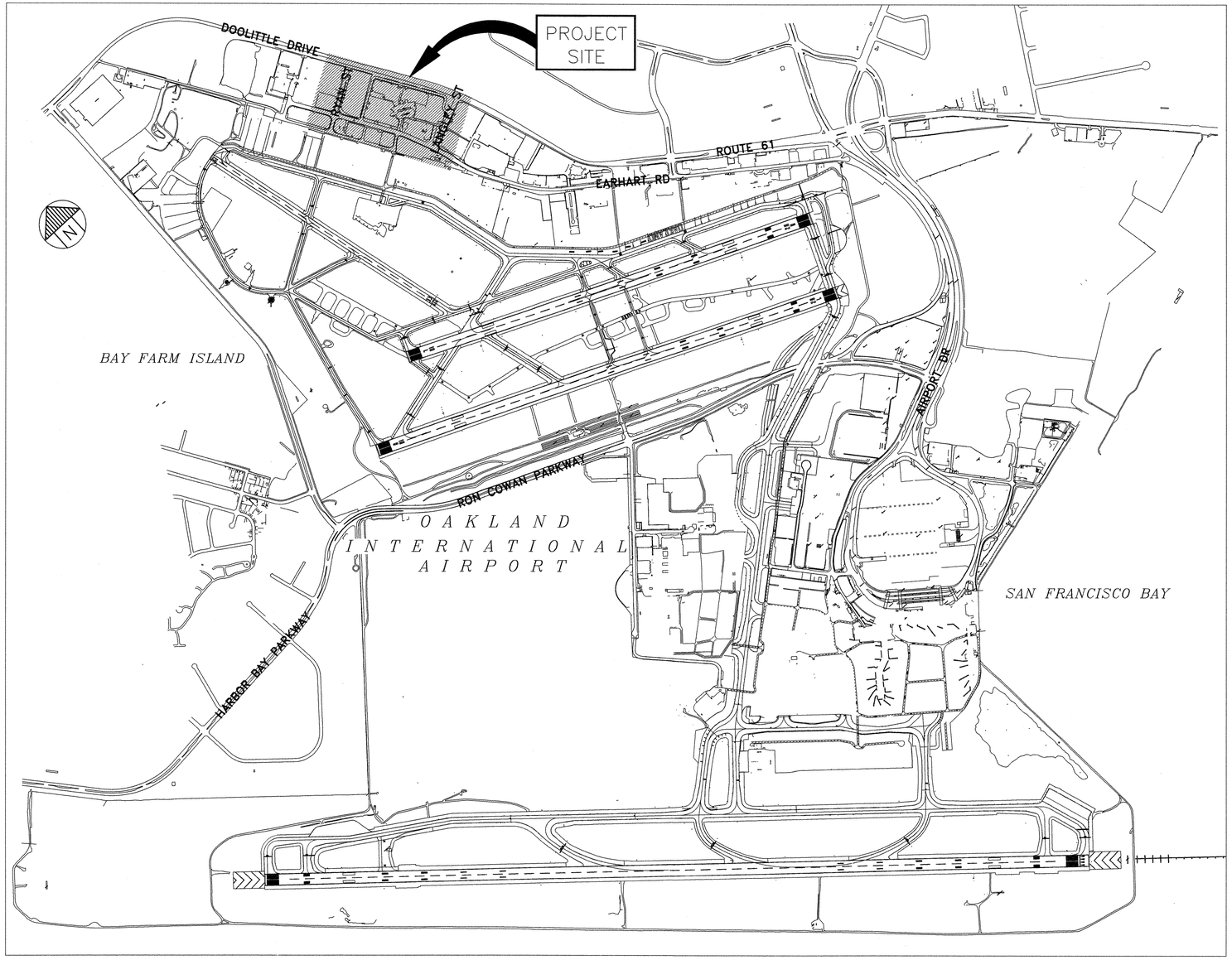


## LOCATION PLAN
SCALE: 1"=800'

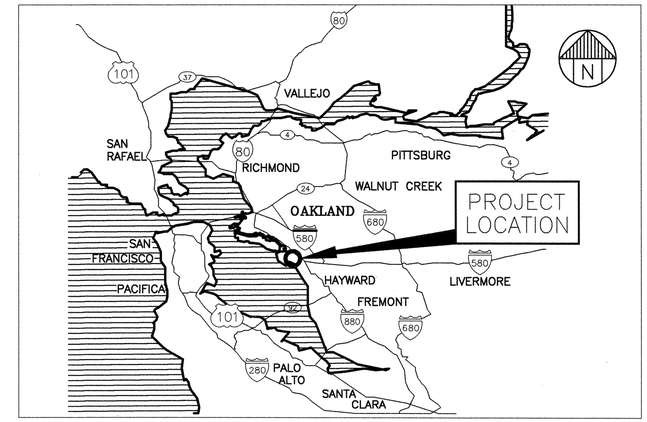


## VICINITY MAP
SCALE: NO SCALE

## SUBCONSULTANTS

**GEOTECHNICAL CONSULTANT**
GEOLABS INC.
212 NINTH STREET, SUITE 209
OAKLAND, CA 94612
PHONE: (510) 393-8008

**SURVEYING CONSULTANT**
TOWILL SURVEY
2300 CLAYTON ROAD, SUITE 1200
CONCORD, CA 94520
PHONE: (925) 682-6976

**ELECTRICAL CONSULTANT**
ACIES ENGINEERING
3371 OLCOTT ST
SANTA CLARA, CA 95054
PHONE: (408) 522-5255

**LANDSCAPING & IRRIGATION CONSULTANT**
HAYGOOD & ASSOCIATES LANDSCAPE ARCHITECTS
1496-B SOLANO AVE
ALBANY, CA 94706
PHONE: (510) 527-6343

PURSUANT TO SECTION 830.6 OF THE GOVERNMENT CODE, THE PORT APPROVES THESE PLANS AND DESIGNS. IN GRANTING THIS APPROVAL, THE PORT HAS RELIED UPON THE JUDGMENT OF THE PERSON IN RESPONSIBLE CHARGE OF THE WORK TO PROVIDE PLANS AND DESIGNS IN CONFORMANCE WITH THE CONTRACT DOCUMENTS.

APPROVED BY: _____

RECOMMENDED BY: _____

REGISTERED PROFESSIONAL ENGINEER — OLGA MORLICH RODRIGUEZ — No. C53594 — EXP. 06-30-17 — CIVIL — STATE OF CALIFORNIA

CAUTION: THIS PLAN MAY BE REDUCED — 0 1" 2" — ORIGINAL SCALE

PROJECT NO. A10081001

REFERENCES:
HORIZONTAL: NAD83(2011)
VERTICAL: NAVD88
PLANFILE 272-26

CAUTION:
CHECK TRACING FOR LATEST REVISIONS

| NO. | REVISIONS | DATE | REV'D | APP'D |
|---|---|---|---|---|
| | | | | |

DRAWN V. ORTEGA
DESIGNED C. RAMIREZ C 64684 (REG. ENGINEER NO.)
CHECKED M. CANEPA C 48676 (REG. ENGINEER NO.)

**PORT OF OAKLAND**
530 WATER ST. OAKLAND, CALIFORNIA

MOTT MACDONALD

OAKLAND INTERNATIONAL AIRPORT

OAK RENTAL CAR CENTER IMPROVEMENTS

TITLE SHEET

DATE: 01-13-17
SCALE: AS SHOWN
SHEET: 1 OF 53 SHEETS
G1 AA-4193

PRINT DATE 02-03-17 13:41:37 C:\pwworking\nmn\water_wastewater\ort5280\d0221851\4193-001.dwg Printed by ORT5280

# ABBREVIATIONS

ABBREVIATIONS: THROUGHOUT THE PLANS ARE ABBREVIATIONS WHICH ARE IN COMMON USE. THE LIST OF ABBREVIATIONS PROVIDED IS NOT INTENDED TO BE COMPLETE OR REPRESENTATIVE OF CONDITIONS OR MATERIALS ACTUALLY USED ON THE PROJECT. THE ENGINEER WILL DEFINE THE INTENT OF ANY ABBREVIATION IN QUESTION.

| | |
|---|---|
| & | AND |
| @ | AT |
| ± | APPROXIMATELY |
| CL | CENTERLINE |
| C1 | CURVE ALIGNMENT NUMBER |
| ° | DEGREE |
| = | EQUALS |
| L1 | LINE ALIGNMENT NUMBER |
| # | NUMBER |
| % | PERCENT |
| A | AREA |
| AANS | AMERICAN ASSOCIATION OF NURSERYMEN STANDARDS |
| | AGGREGATE BASE |
| AB | |
| ABAN | ABANDON (–ED) |
| ABV | ABOVE |
| AC | ACRE |
| AC | ASBESTOS CEMENT |
| AC | ASPHALT CONCRETE |
| ACB | ASPHALT CONCRETE BASE |
| ACP | ASPHALT CONCRETE PAVEMENT |
| ADDL | ADDITIONAL |
| ADJ | ADJUST (–ED, –MENT, –ABLE) |
| ADJT | ADJACENT |
| ADS | ADS CORRUGATED POLYETHYLENE PIPE |
| AFL | AIRFIELD LIGHTING |
| AGG | AGGREGATE |
| AL/ALUM | ALUMINUM |
| ALS | APPROACH LIGHTING SYSTEM |
| ALSF | APPROACH LIGHTING SYSTEM WITH SEQUENCE FLASHER |
| ALT | ALTERNAT(–E,–IVE) |
| ANSI | AMERICAN NATIONAL STANDARD INSTITUTE |
| AOA | AIRPORT OPERATIONS AREA |
| APPROX | APPROXIMAT(–E, –LY) |
| ARCH | ARCHITECTURAL |
| ARFF | AIRCRAFT RESCUE AND FIRE FIGHTING FACILITY |
| ASPH | ASPHALT |
| ASR | AIRPORT SURVEILLANCE RADAR |
| ASTM | AMERICAN SOCIETY FOR TESTING AND MATERIALS |
| ATCT | AIR TRAFFIC CONTROL TOWER |
| ATR | ALL THREADED ROD |
| AUTO | AUTOMATIC |
| AUX | AUXILIARY |
| AVE | AVENUE |
| AVG | AVERAGE |
| BC | BARE COPPER, BEGIN CURVE |
| BEG | BEGIN |
| BET | BETWEEN |
| BITUM | BITUMINOUS |
| BL | BUILDING LINE |
| BLDG | BUILDING |
| BLK | BLOCK(–S) |
| BLKG | BLOCKING |
| BM | BEAM |
| BM | BENCH MARK |
| BOT | BOTTOM |
| BS | BLACK STEEL |
| BSMT | BASEMENT |
| BTWN | BETWEEN |
| BVC | BEGINNING OF VERTICAL CURVE |
| BVCE | BEGINNING OF VERTICAL CURVE ELEVATION |
| BW | BACK OF WALK |
| C | CONDUIT, DEGREES CELSIUS (CENTIGRADE) |
| C&G | CURB AND GUTTER |
| CB | CATCH BASIN |
| CEM | CEMENT |
| CTR | CENTER |
| CF | CUBIC FEET |
| CI | CAST IRON |
| CIP | CAST–IN–PLACE |
| CIRC | CIRCULA(–R,–TION) |
| CIRCUM | CIRCUMFERENCE |
| CJ | CONSTRUCTION JOINT |
| CL | CENTERLINE, CLASS, CHAINLINK FENCE |
| CLASS | CLASSIFICATION |
| CLG | CEILING |
| CLOS | CLOSET |
| CLR | CLEAR (–ANCE) |
| CM | CENTIMETER |
| CMP | CORRUGATED METAL PIPE |
| CMU | CONCRETE MASONRY UNIT |
| COL | COLUMN |
| COMM | COMMUNICATION |
| CONC | CONCRETE |
| COND | CONDUIT |
| CONN | CONNECTION |
| CONST | CONSTRUCTION |
| CONST JT, CJ | CONSTRUCTION JOINT |
| CONT | CONTINUOUS |
| COORD | COORDINATE |
| CP | CONCRETE PIPE |
| | CAPPED |

| | |
|---|---|
| CSPP | CONSTRUCTION SAFETY AND PHASING PLAN |
| CSO | CONSTRUCTION SAFETY OFFICER |
| CTR | CENTER |
| CY | CUBIC YARD |
| DB | DUCT BANK |
| DBL | DOUBLE |
| DEB | DIRECT EARTH BURIED |
| DEG | DEGREE(–S) |
| DEMO | DEMOLISH OR DEMOLITION |
| DET | DETAIL(–S) |
| DEPT | DEPARTMENT |
| DI | DRAIN INLET |
| DIA | DIAMETER |
| DIAG | DIAGONAL(–S) OR DIAGRAM |
| DIM | DIMENSION(–S) |
| DIP | DUCTILE IRON PIPE |
| DIR | DIRECTION |
| DIST | DISTRIBUTION |
| DN | DOWN |
| DWG(s) | DRAWING(–S) |
| E | EAST |
| EA | EACH |
| EBMUD | EAST BAY MUNICIPAL UTILITY DISTRICT |
| EC | END CURVE |
| EG | EXISTING GRADE |
| EHT | EARHART |
| EL, ELEV | ELEVATION |
| ELEC | ELECTRIC (–AL) |
| EMAS | ENGINEERED MATERIAL ARRESTING SYSTEM |
| EMBT | EMBEDMENT |
| EMERG | EMERGENCY |
| ENCL | ENCLOSURE |
| ENGR | ENGINEER |
| EOP | EDGE OF PAVEMENT |
| EOR | ENGINEER OF RECORD |
| EQ | EQUAL |
| EQUIP | EQUIPMENT |
| EQUIV | EQUIVALENT |
| ERSA | EXTENDED RUNWAY SAFETY AREA |
| EST | ESTIMATE (–D) |
| ETC. | ETCETERA |
| EVC | END VERTICAL CURVE |
| EVCE | END VERTICAL CURVE ELEVATION |
| EW | EACH WAY |
| EXC | EXCAVATE |
| EXIST, (E), EX | EXISTING |
| EXP | EXPANSION, EXPOSED |
| EXJ, EXP JT | EXPANSION JOINT |
| E–W | EAST–WEST |
| F | FAHRENHEIT |
| FAA | FEDERAL AVIATION ADMINISTRATION |
| FCD | FAIRCHILD |
| FDN | FOUNDATION |
| FH | FIRE HYDRANT |
| FIG | FIGURE |
| FIN GD, FG | FINISH GRADE |
| FIN | FINISHED |
| FL | FLOOD LIGHT |
| FL XX.XX | FLOW LINE ELEVATION |
| FLASH | FLASHING |
| FLEX | FLEXIBLE |
| FLG | FLANGE |
| FLR | FLOOR |
| FT | FEET, FOOT |
| FTG | FOOTING |
| FUT | FUTURE |
| FW | FIRE WATER |
| FWD | FORWARD |
| G | GROUND |
| GA | GAUGE |
| GAL | GALLON |
| GALV | GALVANIZED |
| GC/CM | GENERAL CONTRACTOR/ CONSTRUCTION MANAGER |
| GENL | GENERAL |
| GND | GROUND |
| GR | GRADE |
| GRS | GALVANIZED RIGID STEEL |
| GV | GATE VALVE |
| H | HIGH, HEIGHT |
| HDM | HIGHWAY DESIGN MANUAL |
| HDPE | HIGH DENSITY POLYETHYLENE |
| HEX | HEXAGONAL |
| HGR | HANGER |
| HGT, HT | HEIGHT |
| HH | HANDHOLE |
| HORIZ | HORIZONTAL |
| HR | HOUR |
| HP | HORSEPOWER |
| HTR | HEATER |
| HV | HIGH VOLTAGE |
| HVAC | HEATING, VENTILATING & AIR CONDITIONING |
| HVY | HEAVY |
| HW | HOT WATER |

| | |
|---|---|
| ID | INSIDE DIAMETER/DIMENSION |
| IE | INVERT ELEVATION |
| IFR | INSTRUMENT FLIGHT RULES |
| ILS | INSTRUMENT LANDING SYSTEM |
| IN | INCH |
| INCL | INCLUDING |
| INST | INSTANTANEOUS |
| INSTR | INSTRUMENT |
| INT | INTERIOR |
| INV | INVERT |
| IPS | IRON PIPE SIZE |
| IWS | INDUSTRIAL WASTE SEWER |
| JB, J–BOX | JUNCTION BOX |
| JCT | JUNCTION |
| JT | JOINT |
| K | KIP |
| KG | KILOGRAM; KNIFE GATE |
| Km | KILOMETER |
| KV | KILOVOLT |
| L | LENGTH; LITER; ANGLE |
| LAT | LATERAL |
| LBS | POUNDS |
| LCP | LEAD CONTAINING PAINT |
| LF | LINEAR FEET |
| LG | LONG |
| LGT | LIGHT |
| LGY | LANGLEY |
| LIN | LINEAR |
| LOC | LOCATION |
| LONG. | LONGITUDINAL |
| LP | LOW POINT |
| LT | LEFT |
| LTG | LIGHTING |
| LTS | LIGHTS |
| MALSR | MEDIUM APPROACH LIGHTING SYSTEM/RAIL |
| MAS | MASONRY |
| MATL | MATERIAL |
| MAX | MAXIMUM |
| MBGR | METAL BEAM GUARD RAIL |
| MECH | MECHANICAL |
| MEMB | MEMBER |
| MES | MITERED END SECTION |
| MFR | MANUFACTURER |
| MG | MILLIGRAMS |
| MH | MANHOLE |
| MIN | MINIMUM; MINUTE |
| MISC | MISCELLANEOUS |
| MMS | MATERIAL MANAGEMENT SITE |
| MOD | MODIFICATION(–S) |
| MON | MONUMENT |
| MPH | MILES PER HOUR |
| MTD | MOUNTED |
| (N) | NEW |
| N | NORTH/NEUTRAL |
| N/A | NOT APPLICABLE |
| NE | NORTHEAST |
| NEC | NATIONAL ELECTRICAL CODE |
| NEMA | NATIONAL ELECTRICAL MANUFACTURER'S ASSOC. |
| NEUT | NEUTRAL |
| NF | NEAR FACE |
| NGVD | NATIONAL GEODETIC VERTICAL DATUM |
| NIC | NOT IN CONTRACT |
| NOM | NOMINAL |
| NORM | NORMAL |
| NO. | NUMBER |
| NOI | NOTICE OF INTENT |
| NOT | NOTICE OF TERMINATION |
| NPP | NON–PERFORATED PIPE |
| NTP | NOTICE TO PROCEED |
| NTS | NOT TO SCALE |
| N–S | NORTH–SOUTH |
| OAK | OAKLAND INTERNATIONAL AIRPORT |
| OC | ON CENTER |
| OD | OUTSIDE DIAMETER |
| OFA | OBJECT–FREE AREA |
| OPP | OPPOSITE |
| OPER | OPERATOR |
| OSHA | OCCUPATIONAL SAFETY AND HEALTH ADMINISTRATION |
| O.T.S. | OPEN TO STRUCTURE |
| P | PAVEMENT |
| PB | PULLBOX, PUSH BUTTON |
| PC | POINT OF CURVATURE; PRE CAST CONCRETE |

| | |
|---|---|
| PCC | PORTLAND CEMENT CONCRETE; POINT OF COMPOUND CURVATURE |
| PCF | POUNDS PER CUBIC FEET |
| PED | PEDESTRIAN |
| PEN | PENETRATION |
| PERF | PERFORATED |
| PH | PHASE |
| PI | POINT OF INTERSECTION |
| PL | PROPERTY LINE/PLATE |
| PLCS | PLACES |
| PLF | POUNDS PER LINEAR FOOT |
| PLY | PLYWOOD |
| PNL | PANEL |
| PRC | POINT OF REVERSE CURVATURE |
| PREFAB | PREFABRICATED |
| PRI | PRIMARY |
| PROJ | PROJECT |
| PROP | PROPERTY |
| PROT | PROTECTOR |
| PSF | POUNDS PER SQUARE FEET |
| PSI | POUNDS PER SQUARE INCH |
| PT | POINT; POINT OF TANGENCY |
| PVC | POLY VINYL CHLORIDE |
| PVI | POINT OF VERTICAL INTERSECTION |
| PVMT | PAVEMENT |
| PWR | POWER |
| P XX.XX | PROPOSED ELEVATION |
| QTY | QUANTITY |
| R, RAD | RADIUS |
| RCP | REINFORCED CONCRETE PIPE |
| RD | ROAD |
| RDR | RUNWAY DISTANCE REMAINING |
| RE | PORT OF OAKLAND RESIDENT ENGINEER |
| REF | REFERENCE |
| REFR | REFRIGERATOR |
| REG | REGULATE |
| REINF | REINFORCED |
| REL | RELATIVE |
| REQ'D | REQUIRED |
| REQT | REQUIREMENT |
| RESIL | RESILIENT |
| REV | REVISION/REVISED |
| RGS | RIGID GALVANIZED STEEL |
| RP | RADIUS POINT |
| RPZ | RUNWAY PROTECTION ZONE |
| RSA | RUNWAY SAFETY AREA |
| RT | RIGHT |
| RVR | RUNWAY VISUAL RANGE |
| RW, R/W | RUNWAY |
| RYN | RYAN |
| S | SOUTH; SLOPE |
| S.B. | SAND BLASTED |
| SCH | SCHEDULE |
| SD | STORM DRAIN |
| SE | SOUTHEAST |
| SECT | SECTION |
| SF | SQUARE FOOT/FEET |
| SHT | SHEET |
| SIM | SIMILAR |
| SL | STREET LIGHT |
| SPCD | SAFETY PLAN COMPLIANCE DOCUMENT |
| SPEC | SPECIFICATIONS |
| SQ | SQUARE |
| SQ FT | SQUARE FEET |
| SQ IN | SQUARE INCHES |
| SS | SANITARY SEWER |
| SSTL | STAINLESS STEEL |
| ST | STREET |
| STA | STATION |
| STD | STANDARD |
| STL | STEEL |
| STOR | STORAGE |
| STRUCT | STRUCTURE |
| SUSP | SUSPEND (–ED) |
| SY | SQUARE YARD |
| SYM | SYMMETRICAL |
| SW | SIDEWALK |
| SWPPP | STORMWATER POLLUTION PREVENTION PLAN |
| TAN. | TANGENT |
| TBD | TO BE DETERMINED |
| TC | TOP OF CURB |
| TE | TOP ELEVATION |
| TEL, TELE | TELEPHONE |
| TEMP | TEMPORARY |
| TG | TOP OF GRATE |
| THK | THICK (–ED, –NESS) |
| THRU | THROUGH |
| TO | TOP OF |
| TOC | TOP OF CONCRETE |
| TOP | TOP OF PAVEMENT |
| TOS | TOP OF STEEL |
| TOPO | TOPOGRAPHY |

| | |
|---|---|
| TRANSF | TRANSFORMER |
| TRANSV | TRANSVERSE |
| TRM | TURF REINFORCEMENT MAT |
| TRTMT | TREATMENT |
| TS | TUBE STEEL |
| TSA | TAXIWAY SAFETY AREA |
| TYP | TYPICAL |
| T/L, TL | TAXILANE |
| T/W, TW, TXY | TAXIWAY |
| UD | UNDERDRAIN |
| UG | UNDERGROUND |
| U.L. | UNDERWRITERS LABORATORY |
| U.B.C. | UNIFORM BUILDING CODE |
| U.N.O. | UNLESS NOTED OTHERWISE |
| VCL | VERTICAL CURVE LENGTH |
| VERT | VERTICAL |
| VOL | VOLUME |
| VS | VERSUS |
| VSR | VEHICLE SERVICE ROAD |
| W/ | WITH |
| W | WEST, WIDTH |
| W.H.S. | WELDED HEADED STUD |
| WM | WATER METER |
| W/O | WITHOUT |
| WST | WATERSTOP |
| WT | WEIGHT |
| WTR | WATER |
| XFMR | TRANSFORMER |
| YD | YARD |
| YR | YEAR |

# SHEET INDEX



# SECTION/DETAIL CALLOUT LEGEND

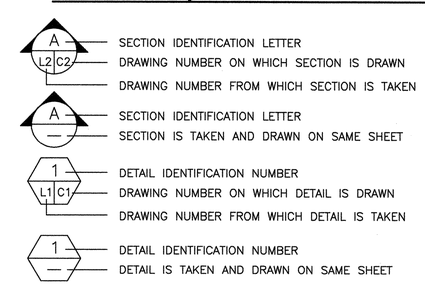


CAUTION: THIS PLAN MAY BE REDUCED 0 1" 2" ORIGINAL SCALE

REGISTERED PROFESSIONAL ENGINEER ALAN MELLICK RODRIGUEZ No. C53594 EXP. 06-30-17 CIVIL STATE OF CALIFORNIA

PROJECT NO. P-A10081001

REFERENCES:

HORIZONTAL: NAD83(2011)
VERTICAL: NAVD88
PLANFILE 272-26

CAUTION:
CHECK TRACING FOR LATEST REVISIONS

| NO. | REVISIONS | DATE | REV'D | APP'D |
|---|---|---|---|---|
| | | | | |

DRAWN V. ORTEGA
DESIGNED C. RAMIREZ C 64684 REG. ENGINEER NO.
CHECKED M. CANEPA C 48676 REG. ENGINEER NO.

PORT OF OAKLAND
530 WATER ST. OAKLAND, CALIFORNIA

MOTT MACDONALD

OAKLAND INTERNATIONAL AIRPORT
OAK RENTAL CAR CENTER IMPROVEMENTS
ABBREVIATIONS

DATE: 01-13-17
SCALE: NO SCALE
SHEET: 2 OF 53 SHEETS
G2 AA-4193

PRINT DATE 02-02-17 8:25:14 C:\pwworking\tmm\water_wastewater\hen68848\d0221851\4193-002.dwg Printed by HEN68848

# LEGEND & SYMBOLS

| EXISTING | PROPOSED |
|---|---|
| Electrical Pull Box | Electrical Pull Box |
| Guy Wire | Guy Wire |
| Light Pole | Light Pole |
| Joint Pole | Joint Pole |
| Gas Valve | Gas Valve |
| Bollard | Bollard |
| Sign | Sign |
| Fire Hydrant | Fire Hydrant |
| Fire Stand Pipe | Fire Stand Pipe |
| Irrigation Box | Irrigation Box |
| Water Meter | Water Meter |
| Water Valve | Water Valve |
| Gas Marker | Gas Marker |
| Telephone Vault | Telephone Vault |
| Sanitary Sewer Manhole | Sanitary Sewer Manhole |
| Storm Drain Manhole | Storm Drain Manhole |
| Catch Basin (rectangular) | Catch Basin (rectangular) |
| Catch Basin (round) | Catch Basin (round) |
| Telephone Manhole | Telephone Manhole |
| Power Manhole | Power Manhole |
| Control Manhole | Control Manhole |
| Switch Utility Vault | Switch Utility Vault |
| Netstream Manhole | Netstream Manhole |
| Unknown Utility Pull Box | Unknown Utility Pull Box |
| Netstream Communication Pull Box | Netstream Communication Pull Box |
| Netstream Communication | Netstream Communication |
| Joint Trench (Electrical) | Joint Trench (Electrical) |
| Salt Water Line | Salt Water Line |
| Water Line | Water Line |
| Storm Drain | Storm Drain |
| Sanitary Sewer | Sanitary Sewer |
| Gas | Gas |
| Fire Water | Fire Water |
| Steam Pipe | Steam Pipe |
| Electrical | Electrical |
| Over Head Line | Over Head Line |
| Telephone | Telephone |
| Chain Link Fence | Chain Link Fence |
| Survey Control Monument/Benchmark | Ridge Line |
| Metal Beam Guard Rail (MBGR) | Metal Beam Guard Rail (MBGR) |
| | Underdrain |
| | Haul Route |

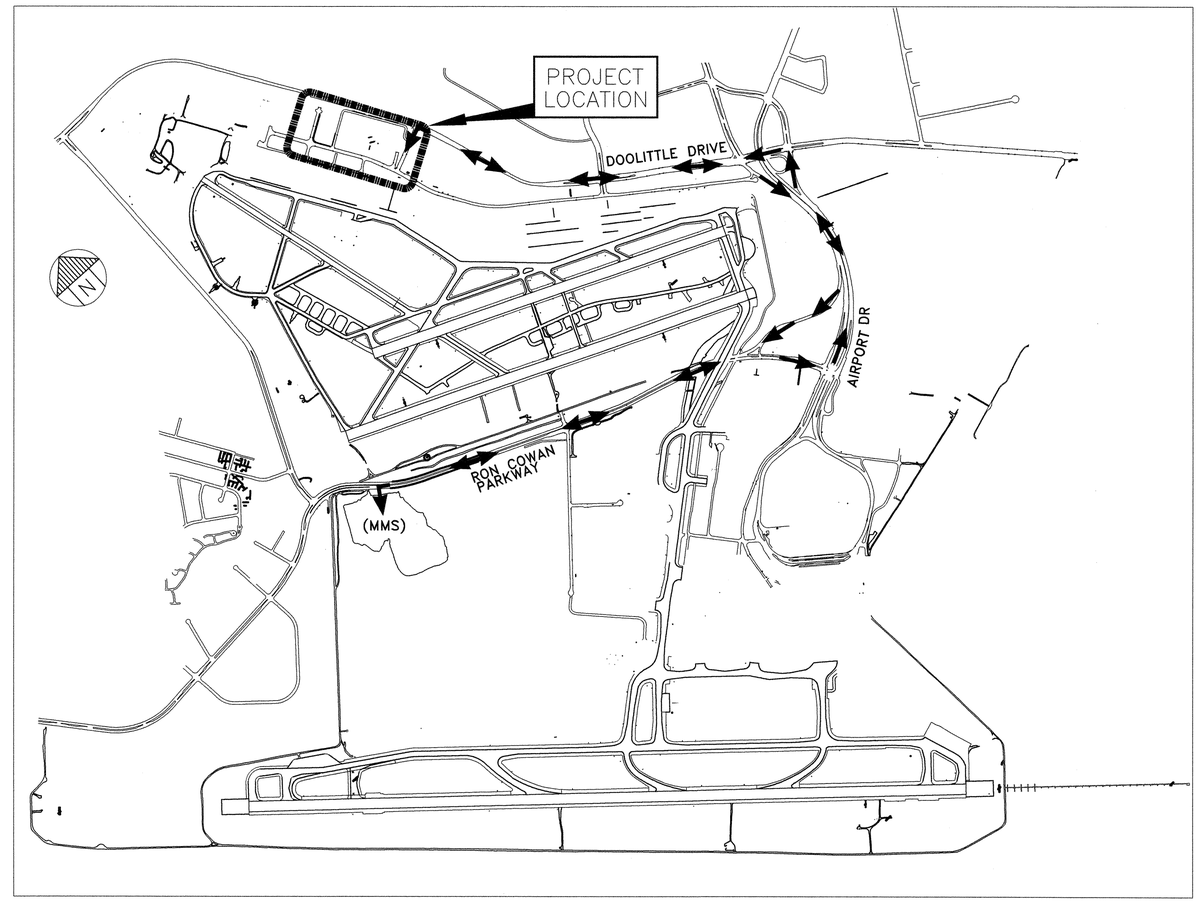


## HAUL ROUTE

SCALE: NO SCALE

CAUTION: THIS PLAN MAY BE REDUCED 0 1" 2" ORIGINAL SCALE

REGISTERED PROFESSIONAL ENGINEER OLGA MARLION RODRIGUEZ No. C53594 EXP. 06-30-17 CIVIL STATE OF CALIFORNIA

PROJECT NO. A10081001

REFERENCES:
HORIZONTAL: NAD83(2011)
VERTICAL: NAVD88
PLANFILE 272-26

CAUTION:
CHECK TRACING FOR LATEST REVISIONS

| NO. | REVISIONS | DATE | REV'D | APP'D |
|---|---|---|---|---|
| | | | | |

DRAWN V. ORTEGA
DESIGNED C. RAMIREZ C 64684 REG. ENGINEER NO.
CHECKED M. CANEPA C 48676 REG. ENGINEER NO.

PORT OF OAKLAND
530 WATER ST. OAKLAND, CALIFORNIA

MOTT MACDONALD

OAKLAND INTERNATIONAL AIRPORT
OAK RENTAL CAR CENTER IMPROVEMENTS
LEGEND, SYMBOLS, AND HAUL ROUTE

DATE: 01-13-17
SCALE: NO SCALE
SHEET: 3 OF 53 SHEETS
G3 AA-4193

PRINT DATE 01-31-17 10:38:57 C:\pwworking\nmm\water_westewater\hen68848\d0221851\4193-003.dwg Printed by HEN68848

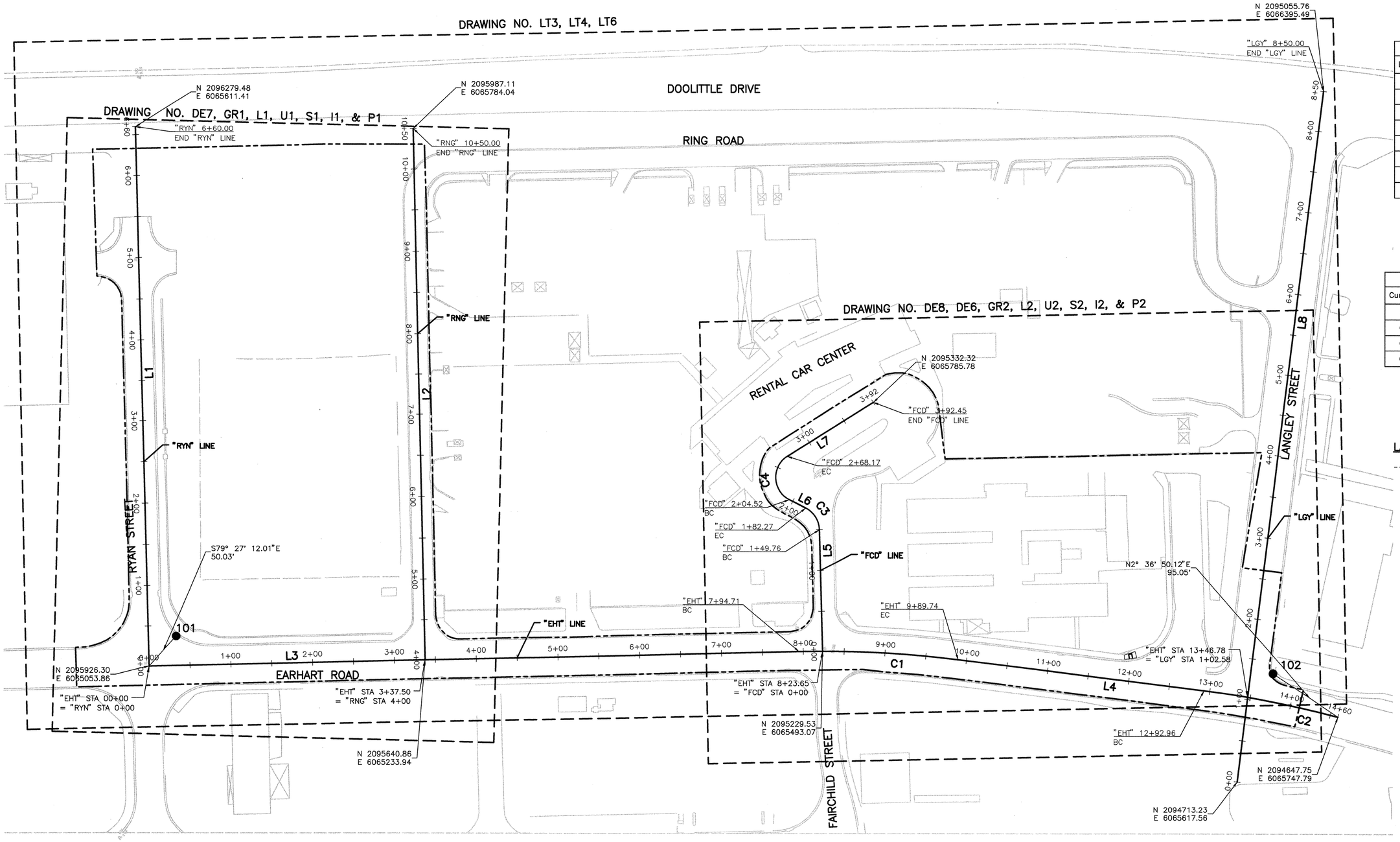


| Line Table | | |
|---|---|---|
| Line # | Length | Direction |
| L1 | 660.000 | N57° 38' 52.44"E |
| L2 | 650.000 | N57° 48' 42.00"E |
| L3 | 794.712 | S32° 14' 51.81"E |
| L4 | 303.223 | S23° 39' 08.33"E |
| L5 | 149.758 | N57° 34' 13.04"E |
| L6 | 22.249 | N04° 31' 30.56"W |
| L7 | 124.283 | S62° 58' 13.56"E |
| L8 | 850.000 | N66° 14' 08.00"E |

| Curve Table | | | |
|---|---|---|---|
| Curve # | Radius | Length | Delta |
| C1 | 1300.00 | 195.02 | 008° 35'43.48" |
| C2 | 1300.00 | 166.69 | 007° 20'48.17" |
| C3 | 30.00 | 32.51 | 062° 05'43.60" |
| C4 | 30.00 | 63.65 | 121° 33'16.99" |

## LAYOUT LEGEND

- - - - - - APPROXIMATE LIMIT OF WORK

## NOTE:

1. CONTROL LINES SHOWN WERE ESTABLISHED SPECIFICALLY FOR THIS PROJECT

60' 0 60' 120'
SCALE: 1" = 60'-0"

CAUTION: THIS PLAN MAY BE REDUCED 0 1" 2" ORIGINAL SCALE

REGISTERED PROFESSIONAL ENGINEER
ILSA MELICA RODRIGUEZ
No. C53594
EXP. 06-30-17
CIVIL
STATE OF CALIFORNIA

PROJECT NO. A10081001

REFERENCES:
HORIZONTAL: NAD83(2011)
VERTICAL: NAVD88
PLANFILE 272-26

CAUTION:
CHECK TRACING FOR LATEST REVISIONS

| NO. | REVISIONS | DATE | REV'D | APP'D |
|---|---|---|---|---|
| | | | | |

DRAWN A. HENSCHKE
DESIGNED A. HENSCHKE C 81506 REG. ENGINEER NO.
CHECKED M. CANEPA C 48676 REG. ENGINEER NO.

PORT OF OAKLAND
530 WATER ST. OAKLAND, CALIFORNIA

MOTT MACDONALD

OAKLAND INTERNATIONAL AIRPORT
OAK RENTAL CAR CENTER IMPROVEMENTS
SITE DIMENSION CONTROL PLAN

DATE: 01-13-17
SCALE: 1"=60'
SHEET: 4 OF 53 SHEETS
G4 AA-4193

PRINT DATE 02-03-17 13:38:17 C:\pwworking\nmn\water_wastewater\crt5280\d0221851\4193-004.dwg Printed by ORT5280

# GENERAL NOTES:

1. THE CONTRACTOR SHALL NOT ENTER ONTO ANY AREA OF THE AOA OUTSIDE OF THE CONSTRUCTION LIMITS, THE STAGING AREAS, OR THE DESIGNATED HAUL ROUTES WITHOUT THE WRITTEN APPROVAL OF THE PORT ENGINEER.
2. ANY DAMAGE TO THE AIRPORT UTILITIES CAUSED BY CONSTRUCTION OPERATIONS SHALL BE REPORTED TO THE PORT ENGINEER IMMEDIATELY AND REPAIRED AT THE CONTRACTOR'S EXPENSE.
3. THE CONTRACTOR SHALL MAINTAIN ACCESS TO ALL FIRE HYDRANTS AT ALL TIMES.
4. THE CONTRACTOR SHALL INFORM APPLICABLE POLICE, FIRE AND EMERGENCY SERVICE AGENCIES 48 HOURS IN ADVANCE OF PROPOSED LANE OR STREET CLOSURE.
5. CONSTRUCTION AREA LIMITS: THE LIMITS, MATERIAL STORAGE AREAS, EQUIPMENT STORAGE AREA, PARKING AREA AND OTHER AREAS DEFINED FOR THE CONTRACTORS EXCLUSIVE USE DURING CONSTRUCTION SHALL BE MARKED BY THE CONTRACTOR. THE CONTRACTOR SHALL ERECT AND MAINTAIN AROUND THE PERIMETER OF THESE AREAS SUITABLE FENCING, MARKING AND OR WARNING DEVICES VISIBLE FOR DAY AND NIGHT USE. TEMPORARY BARRICADES, FLAGGING AND FLASHING WARNING LIGHTS WILL BE REQUIRED AT CRITICAL ACCESS POINTS. TYPE OF MARKING AND WARNING DEVICES SHALL BE AS INDICATED IN THE CONSTRUCTION PHASING PLANS.
6. CONTRACTOR'S SITE SUPERINTENDENT SHALL, AT ALL TIMES, HAVE THE FOLLOWING TELEPHONE NUMBERS ON HIS/HER PERSON: AIRPORT OPERATIONS: 510-563-3361
7. OPEN FLAME WELDING OR TORCH CUTTING OPERATIONS ARE PROHIBITED UNLESS ADEQUATE PRECAUTIONS HAVE BEEN TAKEN AND THE PROCEDURE APPROVED. THE CONTRACTOR SHALL OBTAIN AN AIRPORT "WELDING PERMIT" FROM THE PORT.
8. ALL TRUCKS HAULING DEBRIS FROM THE AIRPORT OR MATERIAL TO THE PROJECT SHALL BE EQUIPPED WITH TAILGATES WHICH SHUT TIGHTLY AND DO NOT PERMIT DEBRIS TO SPILL FROM THE TAILGATE AREA. UNDER NO CIRCUMSTANCES WILL TRUCKS BE PERMITTED TO BE LOADED GREATER THAN LEGAL LIMIT OR HIGHER THAN THE SIDEBOARDS. TRUCKS NOT MEETING THESE REQUIREMENTS OR THAT ALLOW MATERIAL TO BE WIND BLOWN OR TO ESCAPE THEIR CONTAINMENT BEDS ONTO THE ROADWAYS WILL BE REMOVED FROM THE PROJECT IMMEDIATELY AT THE DIRECTION OF THE PORT ENGINEER.

PRINT DATE 02-03-17 14:37:40 C:\pwworking\nmm\water_wastewater\ort52801\d0221851\4193-005.dwg Printed by ORT52801

PROJECT NO. A10081001

REFERENCES:

HORIZONTAL: NAD83(2011)
VERTICAL: NAVD88
PLANFILE 272-26

CAUTION:
CHECK TRACING FOR LATEST REVISIONS

| NO. | REVISIONS | DATE | REV'D | APP'D |
|---|---|---|---|---|
| | | | | |

DRAWN V. ORTEGA
DESIGNED C. RAMIREZ C 64684 REG. ENGINEER NO.
CHECKED M. CANEPA C 48676 REG. ENGINEER NO.

CAUTION: THIS PLAN MAY BE REDUCED 0 1" 2" ORIGINAL SCALE

PORT OF OAKLAND
530 WATER ST. OAKLAND, CALIFORNIA

MOTT MACDONALD

OAKLAND INTERNATIONAL AIRPORT
OAK RENTAL CAR CENTER IMPROVEMENTS
GENERAL NOTES

REGISTERED PROFESSIONAL ENGINEER
OLGA AVELICA RODRIGUEZ
No. 053594
EXP. 06-30-17
CIVIL
STATE OF CALIFORNIA

DATE: 01-13-17
SCALE: NO SCALE
SHEET: 5 OF 53 SHEETS
G5 AA-4193

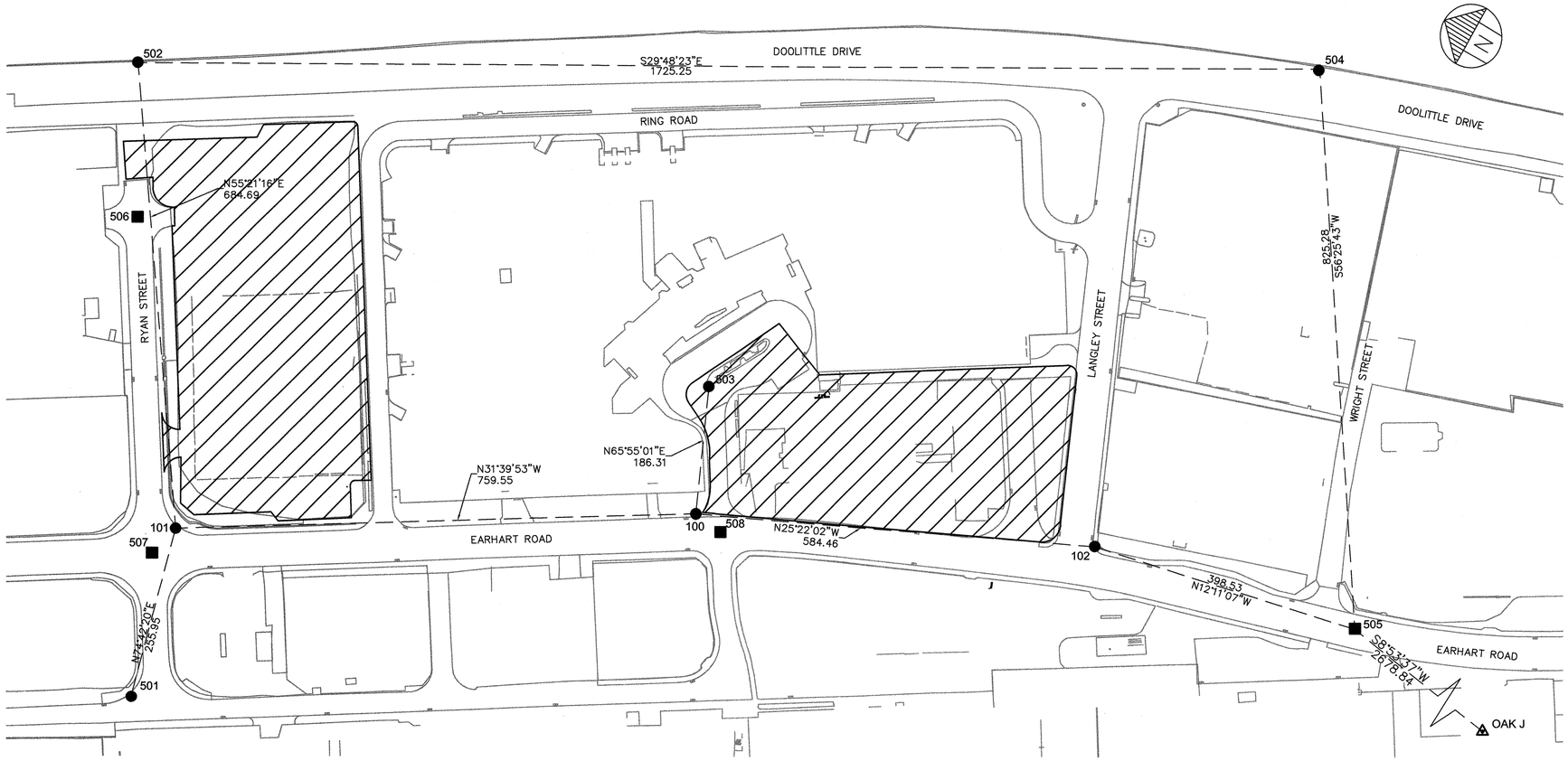


LEGEND:

- ▲ = PRIMARY CONTROL POINT
- ■ = SECONDARY CONTROL POINT
- ● = PROJECT CONTROL POINT
- PACS = PRIMARY AIRPORT CONTROL STATION
- ▨ = AREAS OF DEMOLITION

SURVEYOR'S NOTES:

(1) Horizontal coordinates shown on this Survey Control Diagram are based upon the Port of Oakland Horizontal Datum which is based on NAD83 (2011), California State Plane Zone 3, U.S. Survey Feet. Combined ground to grid scale factor is 0.999934. All distances shown on this survey are ground distance.

(2) Horizontal coordinates for all Project Control stations were determined by GPS control survey conducted August 2016, using Trimble GPS receivers, models R10. GPS measurements were adjusted by correctly–weighted least squares methods using Star*Net–Pro version 6. Adjustment was constrained to NAD83 (2011) positions of N.G.S monument "OAK J" (PID AJ6054) as shown on NGS datasheet for the point.

(3) Orthometric height or elevation for this project was determined by differential leveling conducted September 2016, using a Leica DNA03 digital level and bar code rod. Differential level measurements were adjusted by correctly–weighted least–squares methods using Star*Net–Plus version 6. Adjustment was constrained to North American Vertical Datum of 1988 (NAVD88), points OAK J, elev. = 3.40 and "J 738" (PID HT0280), elev. = 5.64.

PORT LAND SURVEYOR'S STATEMENT

This Survey Control Drawing and Monument Preservation Plan has been examined by me or under my professional supervision, and the information shown hereon is sufficient for the Contractor to fulfill all field surveying requirements and responsibilities as described in Project Manual Section 01720, Survey Requirements.

Dave Murtha, PLS
Port Land Surveyor
BPELSG CERTIFICATE NO. L7817

2/6/17
Date

PRIMARY SURVEY CONTROL

| Point # | Elevation | Northing | Easting | Designation | Description |
|---|---|---|---|---|---|
| 99 | 3.40 | 2091706.39 | 6065422.16 | OAK J (PACS) | STAINLESS ROD IN WELL STAMPED "OAK J 2001" |

SECONDARY SURVEY CONTROL

| Point # | Elevation | Northing | Easting | Description |
|---|---|---|---|---|
| 505 | 3.73 | 2094353.02 | 6065836.31 | BRASS DISK IN MON WELL "EAR–WRI–BC" |
| 506 | | 2096192.78 | 6065469.42 | BRASS DISK IN MON WELL "RYAN–EAST" |
| 507 | | 2095928.58 | 6065052.38 | BRASS DISK IN MON WELL "EAR–RYAN" |
| 508 | | 2095226.07 | 6065494.93 | BRASS DISK IN MON WELL "EAR–FAIR" |

PROJECT SURVEY CONTROL

| Point # | Elevation | Northing | Easting | Description |
|---|---|---|---|---|
| 100 | 7.50 | 2095270.68 | 6065501.80 | CUT X |
| 101 | 6.50 | 2095917.15 | 6065103.07 | MAG NAIL & TOWILL TAG |
| 102 | 5.17 | 2094742.57 | 6065752.19 | CUT X |
| 501 | 2.64 | 2095849.64 | 6064856.19 | MAG NAIL & TOWILL TAG |
| 502 | 9.99 | 2096306.40 | 6065666.36 | MAG NAIL & TOWILL TAG |
| 503 | 9.00 | 2095346.70 | 6065671.89 | MAG NAIL & TOWILL TAG |
| 504 | 10.90 | 2094809.38 | 6066523.93 | MAG NAIL & TOWILL TAG |

NOTES TO CONTRACTOR

1) Refer to Section 01720, Surveying Requirements, of the project manual which describes field surveying requirements and responsibilities for the project.

MONUMENT PRESERVATION

1) Engineer has reviewed the site and determined that no monuments are jeopardized by this project. Therefore there is no project–specific monument preservation plan.

2) Contractor is still responsible for reporting discovered monuments as stated in Project Manual Section 01720 Article 1.06 B 7.

NOTE:

Project Control Points 100, 101 and 503 are within the Limits of Demolition for the construction phase of this project and will be lost. Contractor is responsible for verifying accuracy of Project Control and offsetting as necessary to ensure Project Control is available during all phases of Project.

SURVEYOR'S STATEMENT

This map correctly represents a survey made by me or under my direction in accordance with the Sections 8726(f) and 8726(g) of the Land Surveyors Act. Monumentation shown hereon of is a sufficient basis from which the construction lines and grades can be set, and that the monument descriptions are sufficient to allow for recovery and identification by someone who is unfamiliar with the area.

John T. May, PLS
BPELSG CERTIFICATE NO. L8570

2-6-2017
Date

LICENSED LAND SURVEYOR
JOHN THOMAS MAY
No. 8570
Exp. 03-31-17
STATE OF CALIFORNIA

0 100' 200'

REFERENCES:
PLANS:
FIELD BOOKS:
HORIZONTAL: NAD83(2011)
VERTICAL: NAVD88
PLANFILE 272–26
CAUTION: CHECK TRACING FOR LATEST REVISIONS

REVISIONS

| NO. | | DATE | REV'D | APP'D |
|---|---|---|---|---|
| | | | | |

SURVEY I. MCNEIL LSIT3818
DESIGNED X. CHEN
CHECKED J. MAY LIC. LAND SURVEYOR L8570
REVIEWED D. MURTHA LIC. LAND SURVEYOR L7817 LIC. LAND SURVEYOR

PORT OF OAKLAND
530 WATER ST. OAKLAND, CALIFORNIA

TOWILL Surveying, Mapping and GIS Services
2300 Clayton Road, Suite 1200
Concord, CA 94520-1268

OAKLAND INTERNATIONAL AIRPORT
RENTAL CAR CENTER RE–DESIGN PROJECT
SURVEY CONTROL&MONUMENT PRESERVATION

DATE: 2017–01–20
SCALE: 1" = 100'
SHEET: 6 OF 53 SHEETS
V1 AA–4193

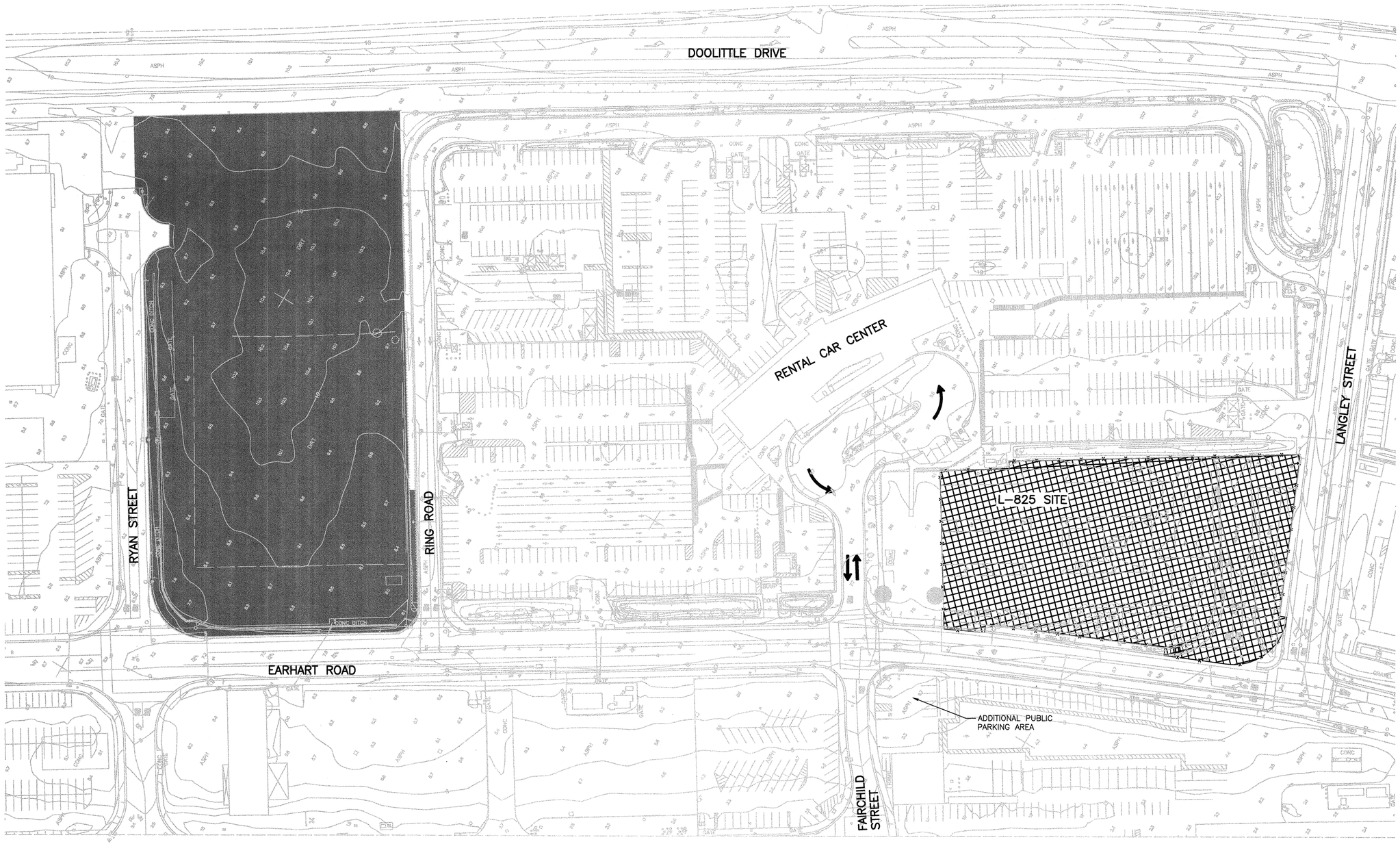


STAGE 1

## STAGE CONSTRUCTION LEGEND

- CONSTRUCT
- DEMOLISH
- TEMPORARY
- SHUTTLE TRAFFIC
- TEMPORARY FENCE
- PED — PEDESTRIAN TRAFFIC (IF DIFFERENT FROM CURRENT)
- (1) CONSTRUCTION NOTE NUMBER

## STAGE 1 CONSTRUCTION NOTES

### CONSTRUCTION:

RAC FACILITY

1. PLACE TEMPORARY FENCE AROUND L-825 SITE.
2. DEMOLISH L-825 BUILDING AND IMPROVEMENTS WITHIN FENCED AREA.

RYAN ST LOT

1. PREPARE ROUGH GRADING AT THE RYAN STREET LOT.
2. STOCKPILE GRAVEL TO USE FOR TEMPORARY SHUTTLE DROP-OFF AT VACATED L-825 SITE
3. INSTALL DRAINAGE SYSTEM AT RYAN STREET LOT.
4. CONSTRUCT ALL IMPROVEMENTS AROUND THE RYAN STREET LOT.

### TRAFFIC:

1. PLACE CONSTRUCTION SIGNS AS REQUIRED BY CITY OF OAKLAND TRAFFIC CONTROL DETAILS.
2. USE EXISTING RENTAL CAR CENTER INGRESS/EGRESS DURING THIS STAGE.
3. FOR PUBLIC PARKING USE EXISTING RENTAL CAR CENTER LOT AS AVAILABLE. USE PARKING LOT AT SOUTHEAST CORNER OF FAIRCHILD AND EARHART FOR ADDITIONAL PARKING.

### NOTES:

1. CONTRACTOR TO PLACE FENCE AROUND ALL WORKING AREAS AS DIRECTED BY ENGINEER.
2. ALL PEDESTRIAN ACCESS MUST COMPLY WITH ADA REQUIREMENTS.
3. SEE DEMOLITION PLANS FOR DETAILS REGARDING DEMOLITION OF L-825 BUILDING SITE.
4. SEE HAUL ROUTE ON SHEET G3.
5. ALL SALVAGED MATERIAL SHALL GO TO PORT YARD AS DIRECTED BY PORT ENGINEER.
6. SEE REMAINING PLANS FOR COMPLETE WORK DESCRIPTIONS.

60' 0 60' 120'
SCALE: 1" = 60'-0"

CAUTION: THIS PLAN MAY BE REDUCED 0 1" 2" ORIGINAL SCALE

REGISTERED PROFESSIONAL ENGINEER
OLGA MELICH RODRIGUEZ
No. C53594
EXP. 06-30-17
CIVIL
STATE OF CALIFORNIA

PROJECT NO. A10081001

REFERENCES:
HORIZONTAL: NAD83(2011)
VERTICAL: NAVD88
PLANFILE 272-26

CAUTION:
CHECK TRACING FOR LATEST REVISIONS

| NO. | REVISIONS | DATE | REV'D | APP'D |
|---|---|---|---|---|
| | | | | |

DRAWN A. HENSCHKE
DESIGNED O. RODRIGUEZ C 52594 REG. ENGINEER NO.
CHECKED M. CANEPA C 48676 REG. ENGINEER NO.

PORT OF OAKLAND
530 WATER ST. OAKLAND, CALIFORNIA

MOTT MACDONALD

OAKLAND INTERNATIONAL AIRPORT
OAK RENTAL CAR CENTER IMPROVEMENTS
STAGE CONSTRUCTION 1 OF 2

DATE: 01-13-17
SCALE: 1"=60'
SHEET: 7 OF 53 SHEETS
SC1 AA-4193

PRINT DATE 01-19-17 13:32:39 C:\pwworking\nmm\water_wastewater\en68848\d0221851\A193-007.dwg Printed by HEN68848

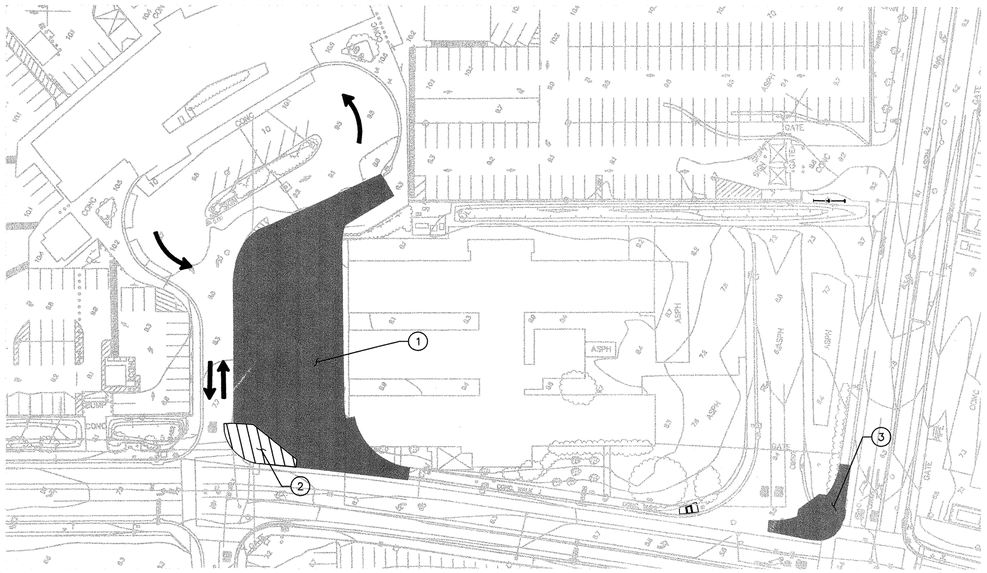


STAGE 2

## STAGE 2 CONSTRUCTION NOTES

### CONSTRUCTION:

RAC FACILITY

1. CONSTRUCT NEW MEDIAN ISLANDS, DRAINAGE, VALLEY GUTTER, BUS INGRESS ROAD, AND PARKING LOT UP TO LIMIT SHOWN.
2. CONSTRUCT TEMPORARY PAVEMENT BETWEEN NEW BUS ENTRANCE AND EXISTING BUS ENTRANCE FOR TEMPORARY BUS PULLOUT ON EARHART RD.
3. CONSTRUCT NEW CURB, GUTTER, AND SIDEWALK AT THE CORNER OF LANGLEY AND EARHART.

### TRAFFIC:

1. USE PARKING LOT ON SE CORNER OF FAIRCHILD STREET AND EARHART RD FOR TEMPORARY PARKING.
2. BUS TRAFFIC TO CONTINUE TO USE EXISTING RENTAL CAR CENTER INGRESS/EGRESS ROAD.

## STAGE CONSTRUCTION LEGEND

- CONSTRUCT
- DEMOLISH
- TEMPORARY
- SHUTTLE TRAFFIC
- TEMPORARY FENCE
- PED — PEDESTRIAN TRAFFIC (IF DIFFERENT FROM CURRENT)
- (1) CONSTRUCTION NOTE NUMBER

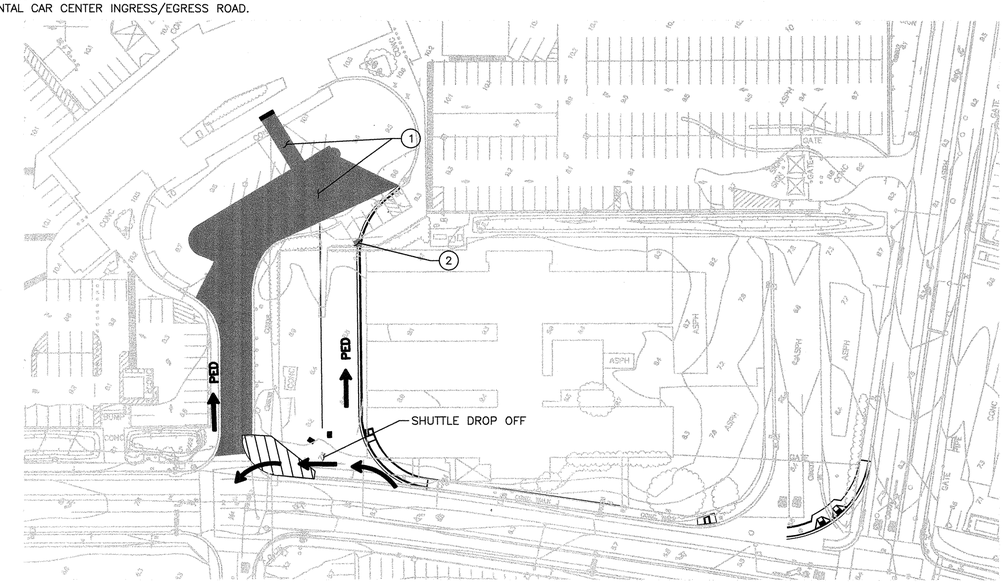


STAGE 3

## STAGE 3 CONSTRUCTION NOTES

### CONSTRUCTION:

RAC FACILITY

1. CONSTRUCT ALL IMPROVEMENTS IN FRONT OF RENTAL CAR FACILITY INCLUDING RECONSTRUCTED PAVEMENT, ISLAND, EGRESS ROAD AND REMAINING PARKING LOT.
2. PLACE AC FOR TEMPORARY ADA COMPLIANT ACCESS.
3. CONTRACTOR WORKING SCHEDULE FOR STAGE 3 IS 8:00 A.M. TO 5:00 P.M ON TUESDAY AND WEDNESDAY ONLY. CONTRACTOR TO COORDINATE WITH ENGINEER. STAGE 3 WORK SHALL BE COMPLETED WITHIN 2 CONSECUTIVE WORKING DAYS.

### TRAFFIC:

1. BUS SHUTTLE TRAFFIC TO USE NEW ENTRANCE AREA FOR TEMPORARY BUS PULLOUT AND DROP OFF
2. CONTINUE USING TEMPORARY PARKING FOR PUBLIC PARKING.

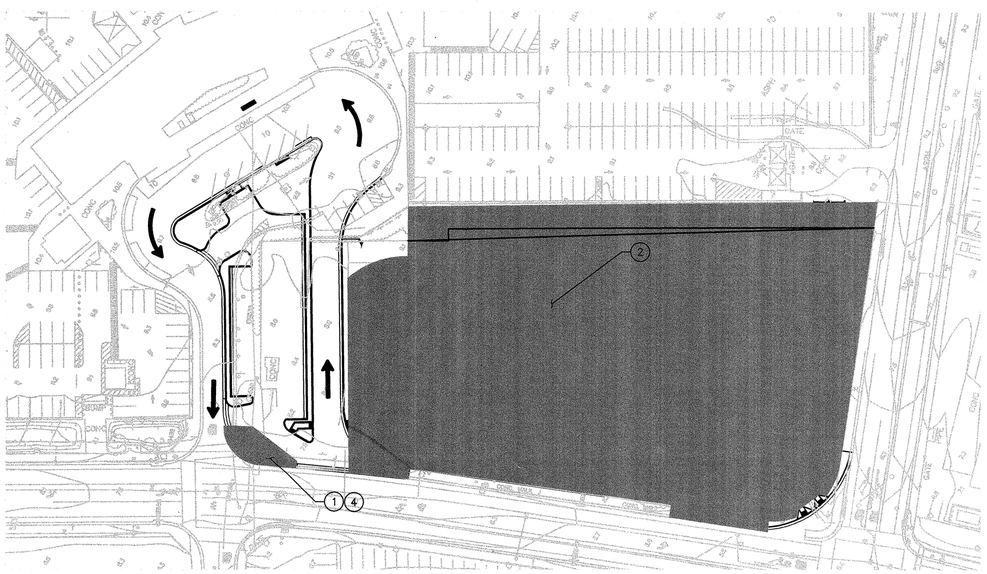


STAGE 4

## STAGE 4 CONSTRUCTION NOTES

### CONSTRUCTION:

RAC FACILITY

1. REMOVE TEMPORARY CONSTRUCTION.
2. INSTALL DRAINAGE AND LIGHTING FACILITIES AT THE L-825 SITE. COMPLETE PAVING, CURB, GUTTER AND SIDEWALK AROUND THE L-825 SITE. DEMOLISH DETENTION BASIN AND PAVE. CONSTRUCT BIO VEGETATED SWALES AROUND THE L-825 SITE. INSTALL GUARD RAILING.
3. COMPLETE REMAINING SIGNING AND STRIPING WORK.
4. CONSTRUCT NEW CURB ISLAND ON EARHART RD.

### TRAFFIC:

1. SHIFT BUS TRAFFIC TO NEW INGRESS ROAD AND PUBLIC PARKING TO NEW PARKING LOT.

CAUTION: THIS PLAN MAY BE REDUCED 0 1" 2" ORIGINAL SCALE

60' 0 60' 120'
SCALE: 1" = 60'-0"

REGISTERED PROFESSIONAL ENGINEER OLGA WHELION RODRIGUEZ No. C53594 EXP. 06-30-17 CIVIL STATE OF CALIFORNIA

PROJECT NO. A10081001

REFERENCES:
HORIZONTAL: NAD83(2011)
VERTICAL: NAVD88
PLANFILE 272-26

CAUTION:
CHECK TRACING FOR LATEST REVISIONS

| NO. | REVISIONS | DATE | REV'D | APP'D |
|---|---|---|---|---|
| | | | | |

DRAWN A. HENSCHKE
DESIGNED O. RODRIGUEZ C 53594 REG. ENGINEER NO.
CHECKED M. CANEPA C 48676 REG. ENGINEER NO.

PORT OF OAKLAND
530 WATER ST. OAKLAND, CALIFORNIA

MOTT MACDONALD

OAKLAND INTERNATIONAL AIRPORT
OAK RENTAL CAR CENTER IMPROVEMENTS
STAGE CONSTRUCTION 2 OF 2

DATE: 01-13-17
SCALE: 1"=60'
SHEET: 8 OF 53 SHEETS
SC2 AA-4193

PRINT DATE 01-31-17 10:59:25 C:\pwworking\mm\water_westswater\hen68848\d0221851\4193-008.dwg Printed by HEN68848

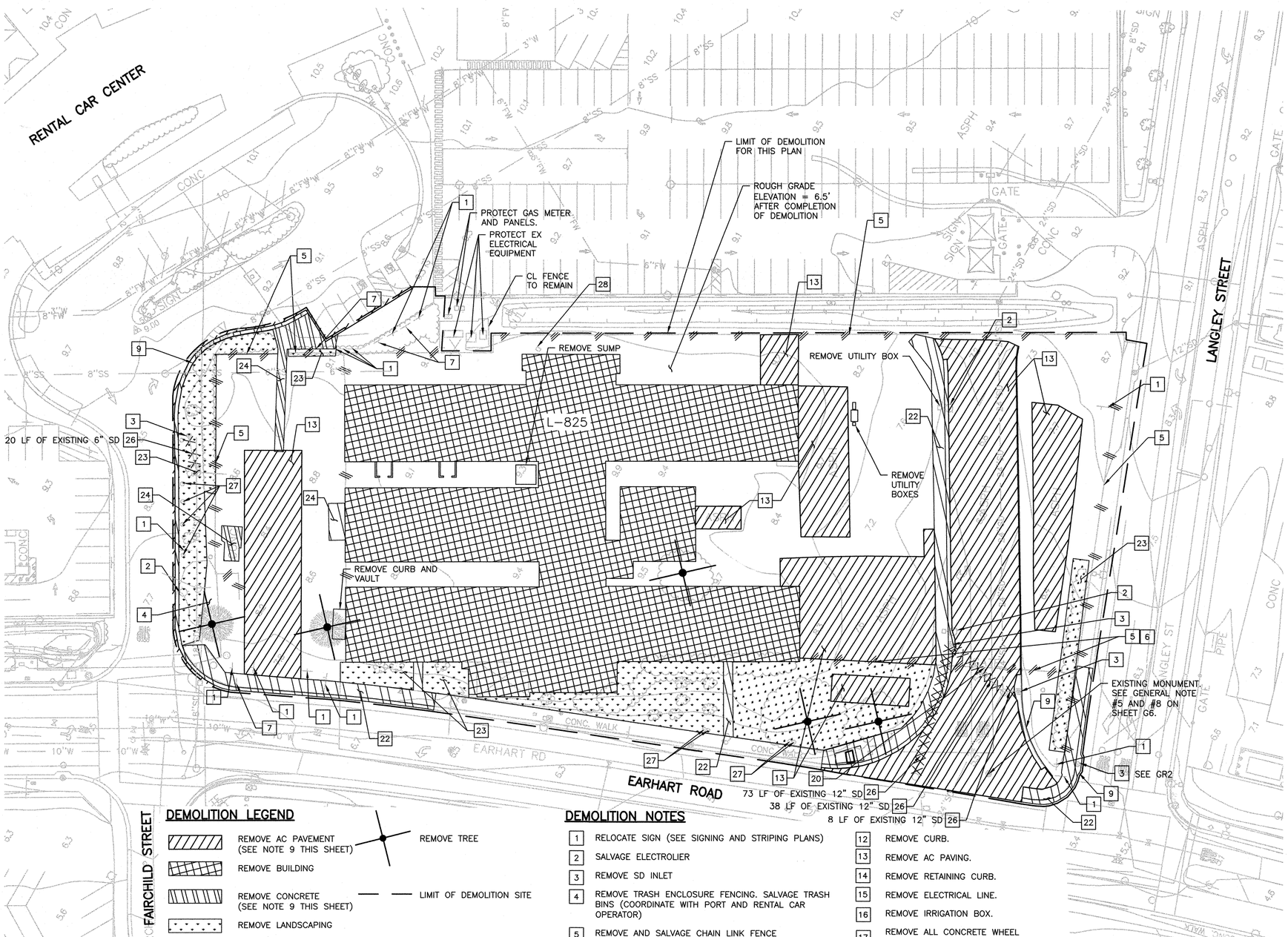


## DEMOLITION GENERAL NOTES:

1. MMS IS LOCATED WITHIN THE AIRPORT SECURE AREA.
2. FOR ALL OTHER DEMOLITION ITEMS OUTSIDE THE LIMITS OF THIS PLAN, SEE LAYOUT SHEETS.
3. REMOVE AND SALVAGE FENCING WITHIN PROJECT LIMITS AS NOTED ON PLANS. FENCING NOT NOTED TO BE REMOVED SHALL BE PROTECTED. ROLL UP SALVAGED FENCE AND DELIVER TO PORT FACILITIES. PANELIZED FENCE SHALL BE BROKEN DOWN & DELIVERED TO PORT FACILITIES IN A STACK OF INDIVIDUAL PANELS. ANY FENCE DESIGNATED BY THE PORT ENGINEER AS TOO DAMAGED FOR RE-USE SHALL BE LEGALLY DISPOSED OF OFF-SITE. PORT FACILITIES IS LOCATED WITHIN 2 MILES OF THE PROJECT SITE AS DESIGNATED BY THE PORT ENGINEER.
4. WORK SHALL NOT IMPACT OR CAUSE TRAFFIC INTERFERENCE ON RENTAL CAR RING ROAD, EARHART ROAD, RYAN STREET, DOOLITTLE DRIVE, LANGLEY STREET OR FAIRCHILD STREET.
5. PROTECT FACILITIES TO REMAIN AS IDENTIFIED ON THE PLANS.
6. THE FOLLOWING NOTES A), B) & C) APPLY TO ALL UTILITY INFRASTRUCTURE WITHIN THE BUILDINGS TO BE DEMOLISHED AND WITHIN 10 FEET OF THE BUILDING ENVELOPE. CUT AND CAP UNDERGROUND SERVICES SUPPLYING THE BUILDING BY DIGGING DOWN AT THE STUB UP TO THE ELBOW, WHERE UTILITY SERVICE IS HORIZONTAL BACKFILL ALL EXCAVATIONS WITH ORIGINAL SPOILS OR ENGINEER APPROVED FILL.

   A. ALL ELECTRICAL AND TELECOMMUNICATIONS EQUIPMENT AND ASSOCIATED RACEWAYS, WIRING AND CABLES INCLUDING TRANSFORMER(S), SWITCHBOARDS, PANELS AND FIXTURES SHALL BE REMOVED AND LEGALLY DISPOSED OF OFF SITE, UNLESS OTHERWISE NOTED ON THE PLANS.

   B. DISCONNECT EXISTING ELECTRICAL AND TELEPHONE CABLES/WIRES FROM EQUIPMENT AND REMOVE CABLES AND WIRES BACK TO THE NEAREST POLE FOR OVERHEAD LINES AND BACK TO THE NEAREST MANHOLE FOR UNDERGROUND LINES. REMOVE ALL EQUIPMENT AND ASSOCIATED BASE SLABS. BREAK OUT WALLS OF ABANDONED MANHOLES AND BACKFILL WITH PORT ENGINEER APPROVED FILL.

   C. DISCONNECT AND REMOVE ALL STEAM, SEWER, WATER AND GAS EQUIPMENT AND ASSOCIATED PIPING, VALVES, TANKS, PUMPS AND OTHER APPURTENANCES EXCEPT AS OTHERWISE NOTED. LEGALLY DISPOSE OF OFF SITE.
7. BRING GROUND LEVEL TO ROUGH GRADE ELEVATION SPECIFIED ON DRAWING NUMBERS DE1, DE7, AND DE8 AFTER COMPLETION OF DEMOLITION.
8. SEE DRAWING NUMBERS DE2-DE6 FOR STRUCTURAL DRAWINGS OF BUILDING. (PLAN FILE 272-26)
9. FOR PURPOSES OF BIDDING, ASSUME AC PAVEMENT TO BE 6" AC PAVEMENT AND CONCRETE TO BE 6" PCC. IF ACTUAL DEPTH DEVIATES SIGNIFICANTLY, PRICE WILL BE ADJUSTED DURING CONSTRUCTION.

## DEMOLITION LEGEND

- REMOVE AC PAVEMENT (SEE NOTE 9 THIS SHEET)
- REMOVE BUILDING
- REMOVE CONCRETE (SEE NOTE 9 THIS SHEET)
- REMOVE LANDSCAPING
- REMOVE MBGR
- REMOVE AND SALVAGE K-RAIL
- REMOVE AND SALVAGE CHAINLINK FENCE
- REMOVE UTILITY
- REMOVE TREE
- LIMIT OF DEMOLITION SITE

## DEMOLITION NOTES

1. RELOCATE SIGN (SEE SIGNING AND STRIPING PLANS)
2. SALVAGE ELECTROLIER
3. REMOVE SD INLET
4. REMOVE TRASH ENCLOSURE FENCING. SALVAGE TRASH BINS (COORDINATE WITH PORT AND RENTAL CAR OPERATOR)
5. REMOVE AND SALVAGE CHAIN LINK FENCE
6. REMOVE AND SALVAGE K-RAIL
7. SALVAGE SIGN PANEL
8. REMOVE CONCRETE LINED DITCH
9. REMOVE CURB AND GUTTER
10. REMOVE PAVEMENT MARKING
11. REMOVE STRIPING
12. REMOVE CURB.
13. REMOVE AC PAVING.
14. REMOVE RETAINING CURB.
15. REMOVE ELECTRICAL LINE.
16. REMOVE IRRIGATION BOX.
17. REMOVE ALL CONCRETE WHEEL STOPS IN PARKING LOT.
18. REMOVE MBGR.
19. REMOVE SIGN LIGHTS.
20. REMOVE AND SALVAGE GATE.
21. REMOVE SIGN PANELS AND LARGE MONUMENT SIGN AND FOUNDATION.
22. REMOVE SIDEWALK.
23. REMOVE LANDSCAPING.
24. REMOVE CONCRETE PAVING.
25. REMOVE SD MH.
26. REMOVE SD PIPE.
27. REMOVE IRRIGATION VALVE.
28. REMOVE AND SALAVAGE PORT WATER METER.

CAUTION: THIS PLAN MAY BE REDUCED 0 1" 2" ORIGINAL SCALE

30' 0 30' 60'
SCALE: 1" = 30'-0"

REGISTERED PROFESSIONAL ENGINEER OLEN WELLICH KEHRBERG No. C53594 EXP. 06-30-17 CIVIL STATE OF CALIFORNIA

PROJECT NO. A10081001

REFERENCES:
HORIZONTAL: NAD83(2011)
VERTICAL: NAVD88
PLANFILE 272-26

CAUTION:
CHECK TRACING FOR LATEST REVISIONS

| NO. | REVISIONS | DATE | REV'D | APP'D |
|---|---|---|---|---|
| | | | | |

DRAWN A. HENSCHKE
DESIGNED A. HENSCHKE C 81506 REG. ENGINEER NO.
CHECKED M. CANEPA C 48676 REG. ENGINEER NO.

PORT OF OAKLAND
530 WATER ST. OAKLAND, CALIFORNIA

MOTT MACDONALD

OAKLAND INTERNATIONAL AIRPORT
OAK RENTAL CAR CENTER IMPROVEMENTS
L-825 DEMOLITION 1 OF 6

DATE: 01-13-17
SCALE: 1"=30'
SHEET: 9 OF 53 SHEETS
DE1 AA-4193

PRINT DATE 02-06-17 10:21:35 C:\Users\can65172\Documents\Port of Oakland\DE1 Edits\4193-009.dwg Printed by CAN65172

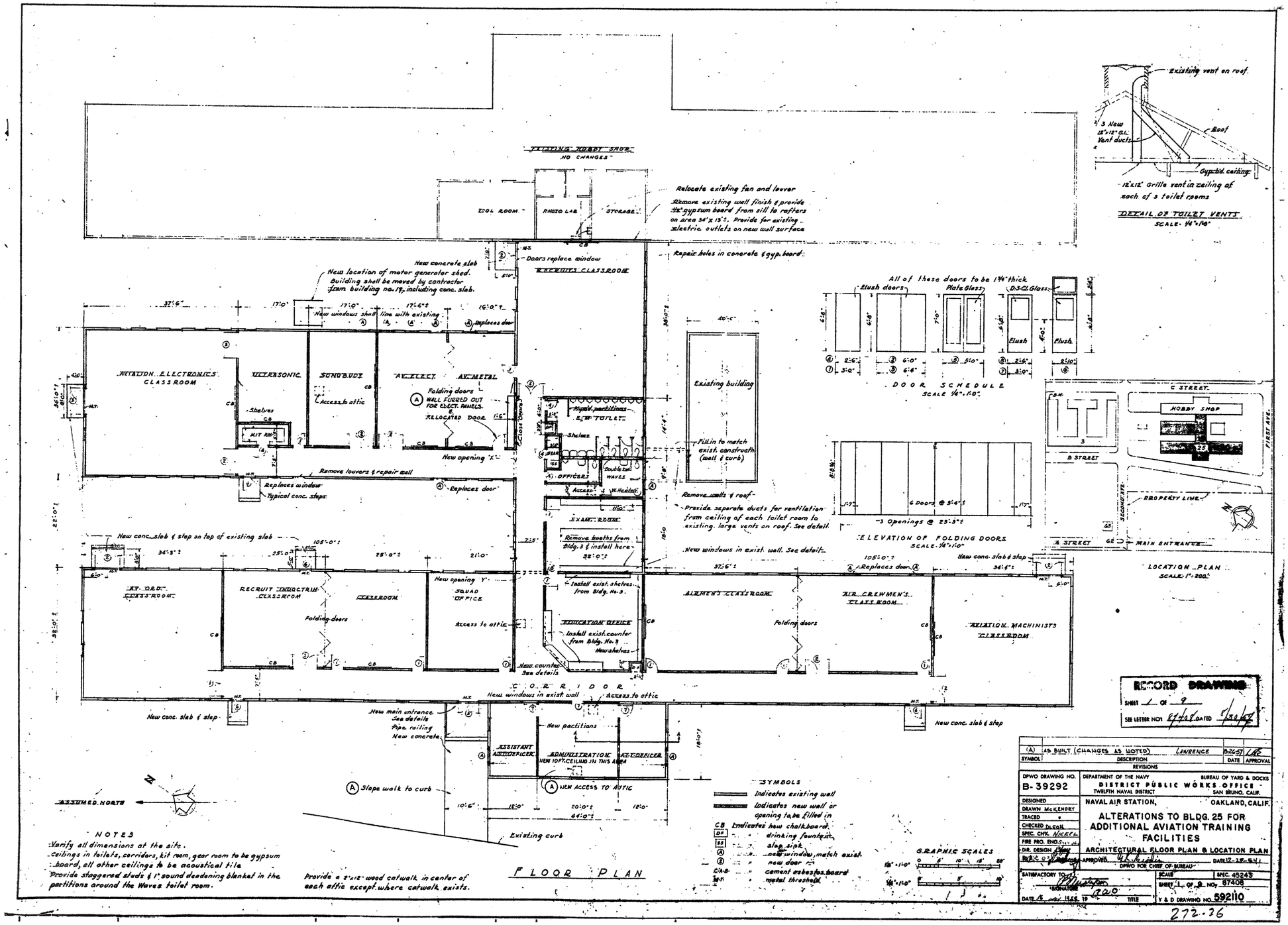


FOR REFERENCE ONLY

CAUTION: THIS PLAN MAY BE REDUCED 0 1" 2" ORIGINAL SCALE

PROJECT NO. A10081001

REFERENCES:

HORIZONTAL: NAD83(2011)
VERTICAL: NAVD88
PLANFILE 272-26

CAUTION:
CHECK TRACING FOR LATEST REVISIONS

| NO. | REVISIONS | DATE | REV'D | APP'D |
|---|---|---|---|---|
| | | | | |

DRAWN S. HUYNH
DESIGNED O. RODRIGUEZ C 52594 REG. ENGINEER NO.
CHECKED M. CANEPA C 48676 REG. ENGINEER NO.

PORT OF OAKLAND
530 WATER ST. OAKLAND, CALIFORNIA

MOTT MACDONALD

OAKLAND INTERNATIONAL AIRPORT

OAK RENTAL CAR CENTER IMPROVEMENTS

L-825 DEMOLITION 2 OF 6

DATE: 01-13-17
SCALE: NO SCALE
SHEET: 10 OF 53 SHEETS
DE2 AA-4193

REGISTERED PROFESSIONAL ENGINEER OLGA MELICA RODRIGUEZ No. C53594 Exp. 06-30-17 CIVIL STATE OF CALIFORNIA

PRINT DATE 01-19-17 13:35:50 C:\pwworking\nmm\water_wastewater\item68848\d0221851\4193-010.dwg Printed by HEN68848

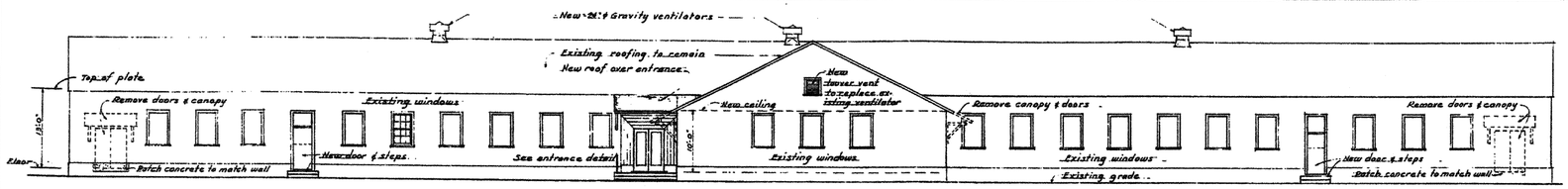


WEST ELEVATION

SCALE: 1/8" = 1'-0"

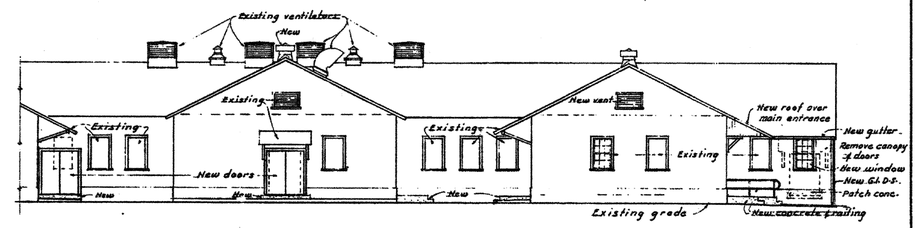


NORTH ELEVATION

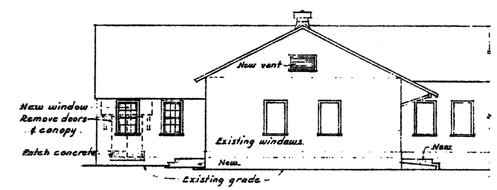


SOUTH ELEVATION

SCALE: 1/8" = 1'-0"

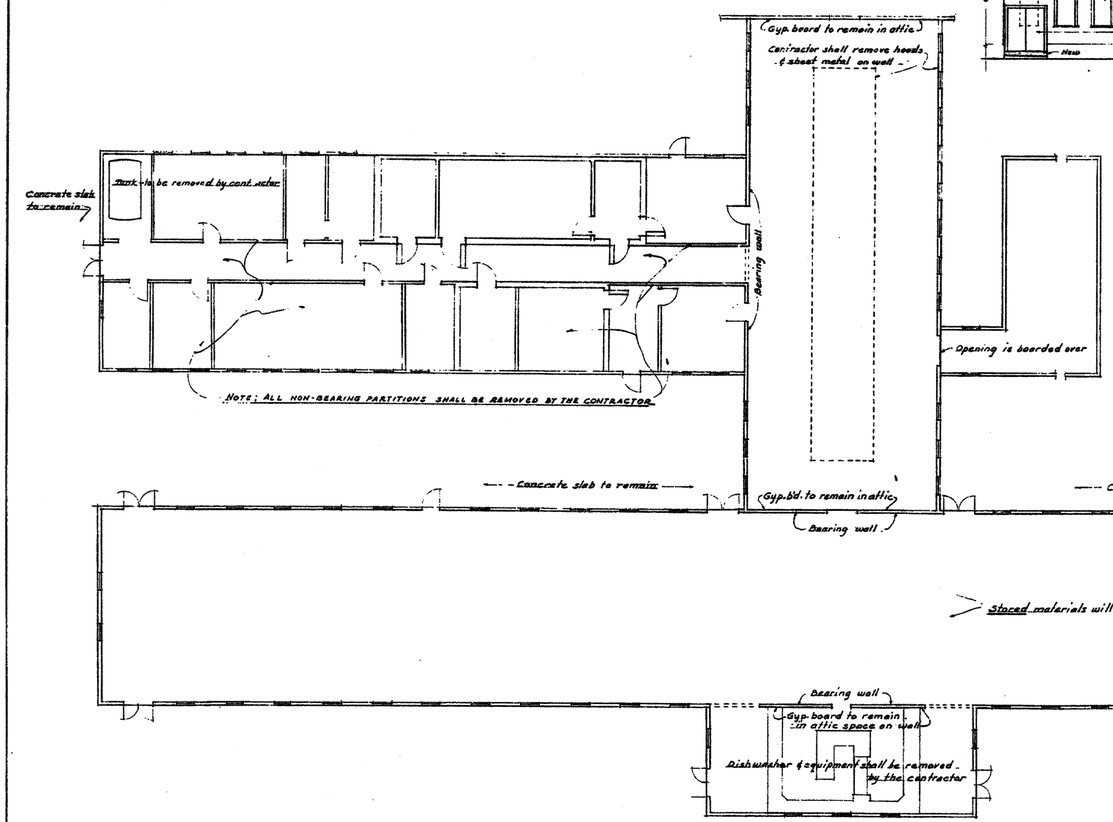


FLOOR PLAN

SHOWING EXISTING CONDITIONS

SCALE: 1/8" = 1'-0"

GRAPHIC SCALES

1/8" = 1'-0" 0 5' 10' 15' 20'

RECORD DRAWING

SHEET 2 OF 9

SEE LETTER NO'S 67408 DATED 8/20/69

| SYMBOL | DESCRIPTION REVISIONS | DATE | APPROVAL |
|---|---|---|---|
| | AS BUILT (NO CHANGES) | LAWRENCE 8-26-67 | |

| | |
|---|---|
| DPWO DRAWING NO. B-39293 | DEPARTMENT OF THE NAVY — BUREAU OF YARD & DOCKS — DISTRICT PUBLIC WORKS OFFICE — TWELFTH NAVAL DISTRICT — SAN BRUNO, CALIF. |
| DESIGNED | NAVAL AIR STATION, OAKLAND, CALIF. |
| DRAWN McKENDRY | ALTERATIONS TO BLDG. 25 FOR ADDITIONAL AVIATION TRAINING FACILITIES |
| TRACED | |
| CHECKED ALKEN | |
| SPEC. CHK. WHEEL | |
| FIRE PRO. ENG. | |
| DIR. DESIGN | ELEVATION AND EXISTING FLOOR PLAN |
| O.&E. OR | APPROVED DATE 12-27-54 DPWO FOR CHIEF OF BUREAU |
| SATISFACTORY TO: SIGNATURE / DATE 16 MAY 1969 19 / TITLE | SCALE / SPEC. 45243 / SHEET 2 OF 9 NO. 87408 / Y & D DRAWING NO. 592111 |

MICROFILMED JUL 8 1971

FOR REFERENCE ONLY

CAUTION: THIS PLAN MAY BE REDUCED 0 1" 2" ORIGINAL SCALE

REGISTERED PROFESSIONAL ENGINEER — OLGA NECLICA RODRIGUEZ — No. C53594 — EXP. 06-30-17 — STATE OF CALIFORNIA

PROJECT NO. A10081001

REFERENCES:

HORIZONTAL: NAD83(2011)
VERTICAL: NAVD88
PLANFILE 272-26

CAUTION:
CHECK TRACING FOR LATEST REVISIONS

| NO. | REVISIONS | DATE | REV'D | APP'D |
|---|---|---|---|---|
| | | | | |

DRAWN S. HUYNH
DESIGNED O. RODRIGUEZ C 52594 REG. ENGINEER NO.
CHECKED M. CANEPA C 48676 REG. ENGINEER NO.

PORT OF OAKLAND
530 WATER ST. OAKLAND, CALIFORNIA

MOTT MACDONALD

OAKLAND INTERNATIONAL AIRPORT

OAK RENTAL CAR CENTER IMPROVEMENTS

L-825 DEMOLITION 3 OF 6

DATE: 01-13-17
SCALE: NO SCALE
SHEET: 11 OF 53 SHEETS

DE3 AA-4193

PRINT DATE 01-19-17 13:36:22 C:\pwworking\hmm\water_wastewater\hen68848\d0221851\4193-011.dwg Printed by HEN68848

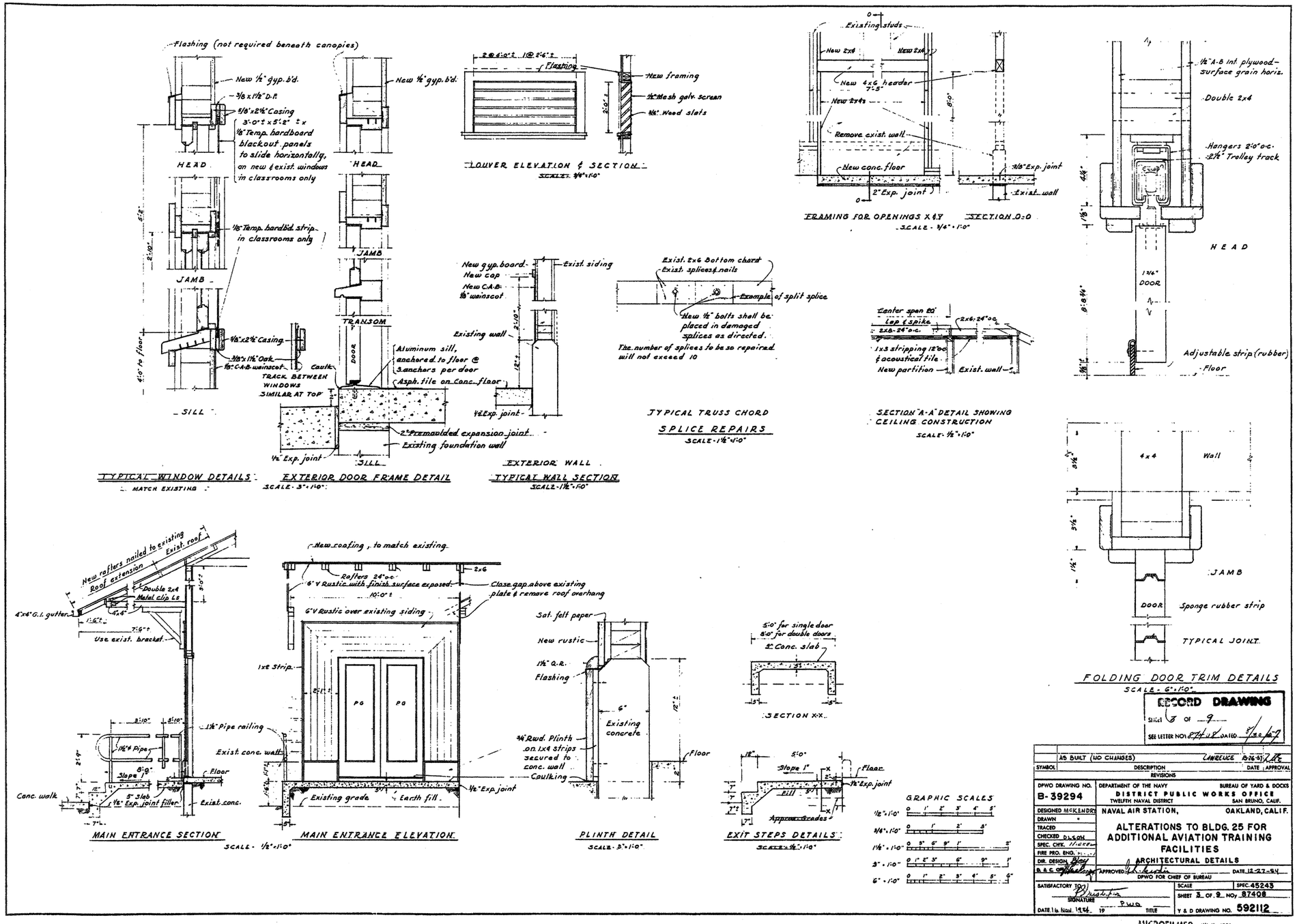


FOR REFERENCE ONLY

CAUTION: THIS PLAN MAY BE REDUCED 0 1" 2" ORIGINAL SCALE

REGISTERED PROFESSIONAL ENGINEER OLGA MELLOR RODRIGUEZ No. C52594 EXP. 06-30-17 CIVIL STATE OF CALIFORNIA

PROJECT NO. A10081001

REFERENCES:
HORIZONTAL: NAD83(2011)
VERTICAL: NAVD88
PLANFILE 272-26

CAUTION:
CHECK TRACING FOR LATEST REVISIONS

| NO. | REVISIONS | DATE | REV'D | APP'D |
|---|---|---|---|---|
| | | | | |

DRAWN S. HUYNH
DESIGNED O. RODRIGUEZ C 52594 REG. ENGINEER NO.
CHECKED M. CANEPA C 48676 REG. ENGINEER NO.

PORT OF OAKLAND
530 WATER ST. OAKLAND, CALIFORNIA

MOTT MACDONALD

OAKLAND INTERNATIONAL AIRPORT
OAK RENTAL CAR CENTER IMPROVEMENTS
L-825 DEMOLITION 4 OF 6

DATE: 01-13-17
SCALE: NO SCALE
SHEET: 12 OF 53 SHEETS
DE4 AA-4193

PRINT DATE 01-19-17 13:36:55 C:\pwworking\mm\water_wastewater\hen68848\d0221851\4193-012.dwg Printed by HEN68848

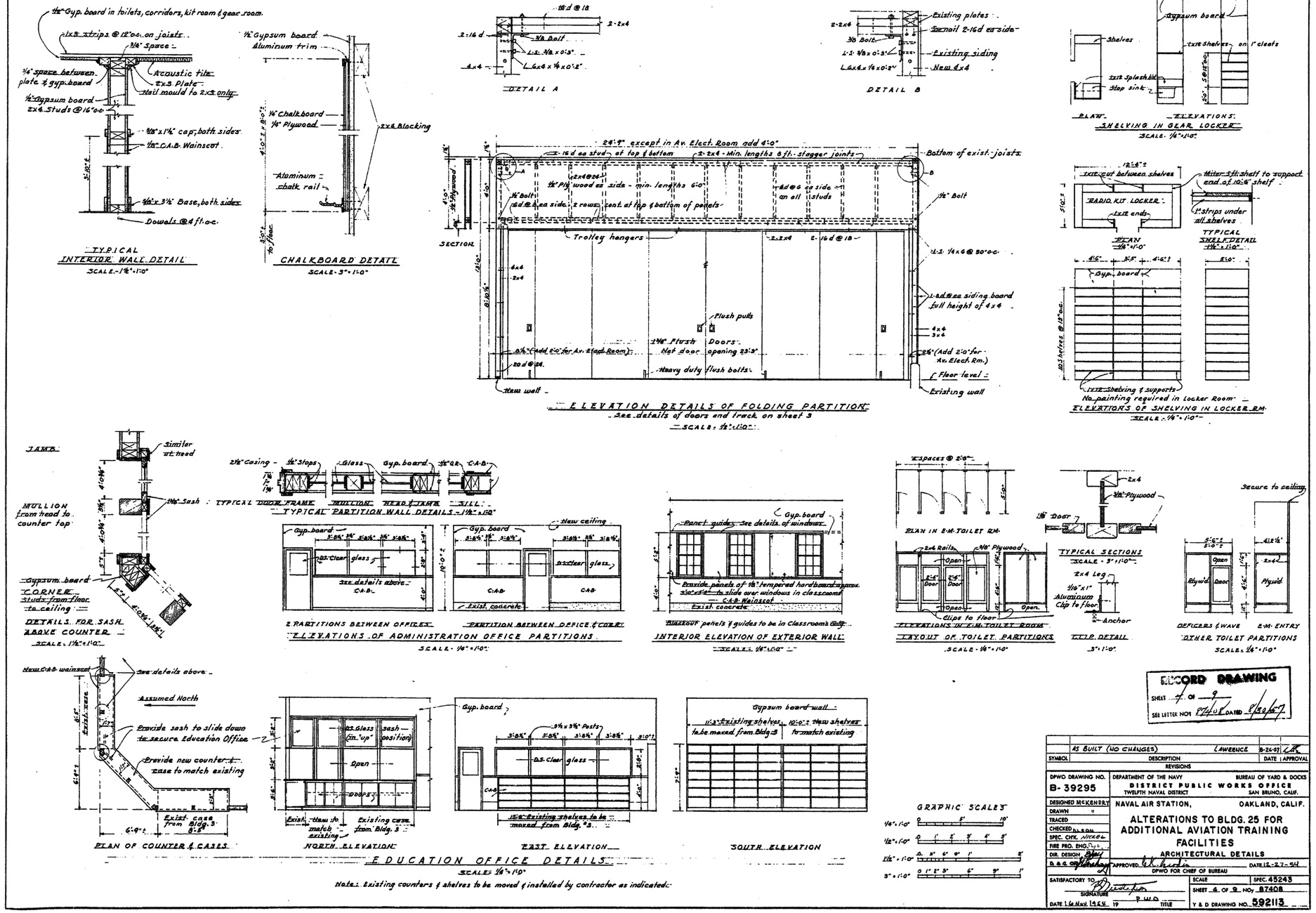


PROJECT NO. A10081001

REFERENCES:

HORIZONTAL: NAD83(2011)
VERTICAL: NAVD88
PLANFILE 272-26

CAUTION:
CHECK TRACING FOR LATEST REVISIONS

| NO. | REVISIONS | DATE | REV'D | APP'D |
|---|---|---|---|---|
| | | | | |

DRAWN S. HUYNH
DESIGNED O. RODRIGUEZ C 52594 REG. ENGINEER NO.
CHECKED M. CANEPA C 48676 REG. ENGINEER NO.

PORT OF OAKLAND
530 WATER ST. OAKLAND, CALIFORNIA

MOTT MACDONALD

OAKLAND INTERNATIONAL AIRPORT

OAK RENTAL CAR CENTER IMPROVEMENTS

L-825 DEMOLITION 5 OF 6

DATE: 01-13-17
SCALE: NO SCALE
SHEET: 13 OF 53 SHEETS
DE5 AA-4193

PRINT DATE 01-19-17 13:37:28 C:\pworking\bmm\water_wastewater\hen68848\d0221851\4193-013.dwg Printed by HEN68848

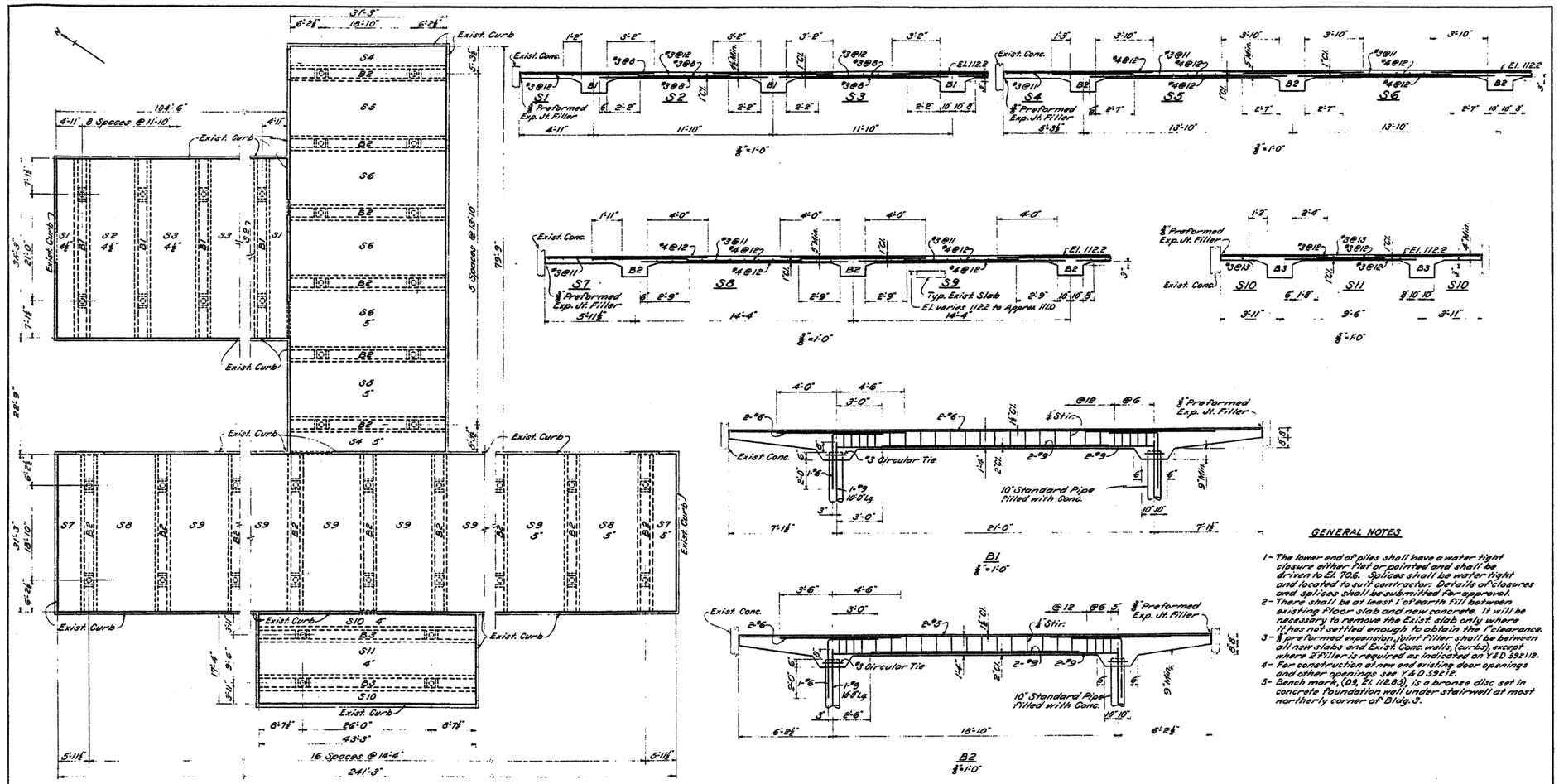


## GENERAL NOTES

1- The lower end of piles shall have a water tight closure either flat or pointed and shall be driven to El. 70±. Splices shall be water tight and located to suit contractor. Details of closures and splices shall be submitted for approval.
2- There shall be at least 1' of earth fill between existing floor slab and new concrete. It will be necessary to remove the Exist. slab only where it has not settled enough to obtain the 1' clearance.
3- ½" preformed expansion joint filler shall be between all new slabs and Exist. Conc. walls (curbs) except where 2" filler is required as indicated on Y&D 592112.
4- For construction at new and existing door openings and other openings see Y&D 592112.
5- Bench mark, (D3, El. 112.83), is a bronze disc set in concrete foundation wall under stairwell at most northerly corner of Bldg. 3.

**RECORD DRAWING**
SHEET 5 OF 9
SEE LETTER NO Y&D 6 DATED 6 Jun 54

## STRUCTURAL DATA

Live Load on Floor 100%
Concrete - - f'c=2,500%
RST- - - - - fs=24,000%
Piles- - - - 40,000#/pile

## GRAPHIC SCALES

1/8"=1'-0" 0' 5' 10' 15'
1/8"=1'-0" 0' 1' 2' 3' 4' 5'

| SYMBOL | DESCRIPTION | DATE | APPROVAL |
|---|---|---|---|
| | AS BUILT (NO CHANGES) LAWRENCE | 8-24-57 | |
| | REVISIONS | | |

| | |
|---|---|
| DPWO DRAWING NO. B-39296 | DEPARTMENT OF THE NAVY — BUREAU OF YARD & DOCKS — DISTRICT PUBLIC WORKS OFFICE — TWELFTH NAVAL DISTRICT — SAN BRUNO, CALIF. |
| DESIGNED WAHLGREN | NAVAL AIR STATION, OAKLAND, CALIF. |
| DRAWN WAHLGREN | ALTERATIONS TO BLDG. 25 FOR ADDITIONAL AVIATION TRAINING FACILITIES |
| TRACED | |
| CHECKED O'CONNOR | |
| SPEC. CHK. NICKEL | |
| FIRE PRO. ENG. | |
| DIR. DESIGN | FLOOR FRAMING PLAN & DETAILS |
| PROJ. SUPV. | APPROVED DPWO FOR CHIEF OF BUREAU — DATE 12-27-54 |
| SATISFACTORY TO | SCALE — SPEC. 45243 |
| SIGNATURE | SHEET 5 OF 9 No. 87408 |
| DATE 16 Nov 1953 19 — TITLE PWO | Y & D DRAWING NO. 592114 |

MICROFILMED JUL 8 1971

DCO-SF-2-5-54-400

FOR REFERENCE ONLY

CAUTION: THIS PLAN MAY BE REDUCED 0 1" 2" ORIGINAL SCALE

REGISTERED PROFESSIONAL ENGINEER — OLGA MARLICE RODRIGUEZ — No. C52594 — EXP. 06-30-17 — CIVIL — STATE OF CALIFORNIA

PROJECT NO. A10081001

REFERENCES:
HORIZONTAL: NAD83(2011)
VERTICAL: NAVD88
PLANFILE 272-26

CAUTION:
CHECK TRACING FOR LATEST REVISIONS

| NO. | REVISIONS | DATE | REV'D | APP'D |
|---|---|---|---|---|
| | | | | |

DRAWN S. HUYNH
DESIGNED O. RODRIGUEZ C 52594 REG. ENGINEER NO.
CHECKED M. CANEPA C 48676 REG. ENGINEER NO.

# PORT OF OAKLAND
530 WATER ST. OAKLAND, CALIFORNIA

MOTT MACDONALD

OAKLAND INTERNATIONAL AIRPORT
OAK RENTAL CAR CENTER IMPROVEMENTS
L-825 DEMOLITION 6 OF 6

DATE: 01-13-17
SCALE: NO SCALE
SHEET: 14 OF 53 SHEETS
DE6 AA-4193

PRINT DATE 01-13-17 13:38:02 C:\pwworking\hmm\water_wastewater\hen68848\d0221851\4193-014.dwg Printed by HEN68848

## DEMOLITION GENERAL NOTES:

1. SEE SHEET DE1 FOR DEMOLITION GENERAL NOTES.

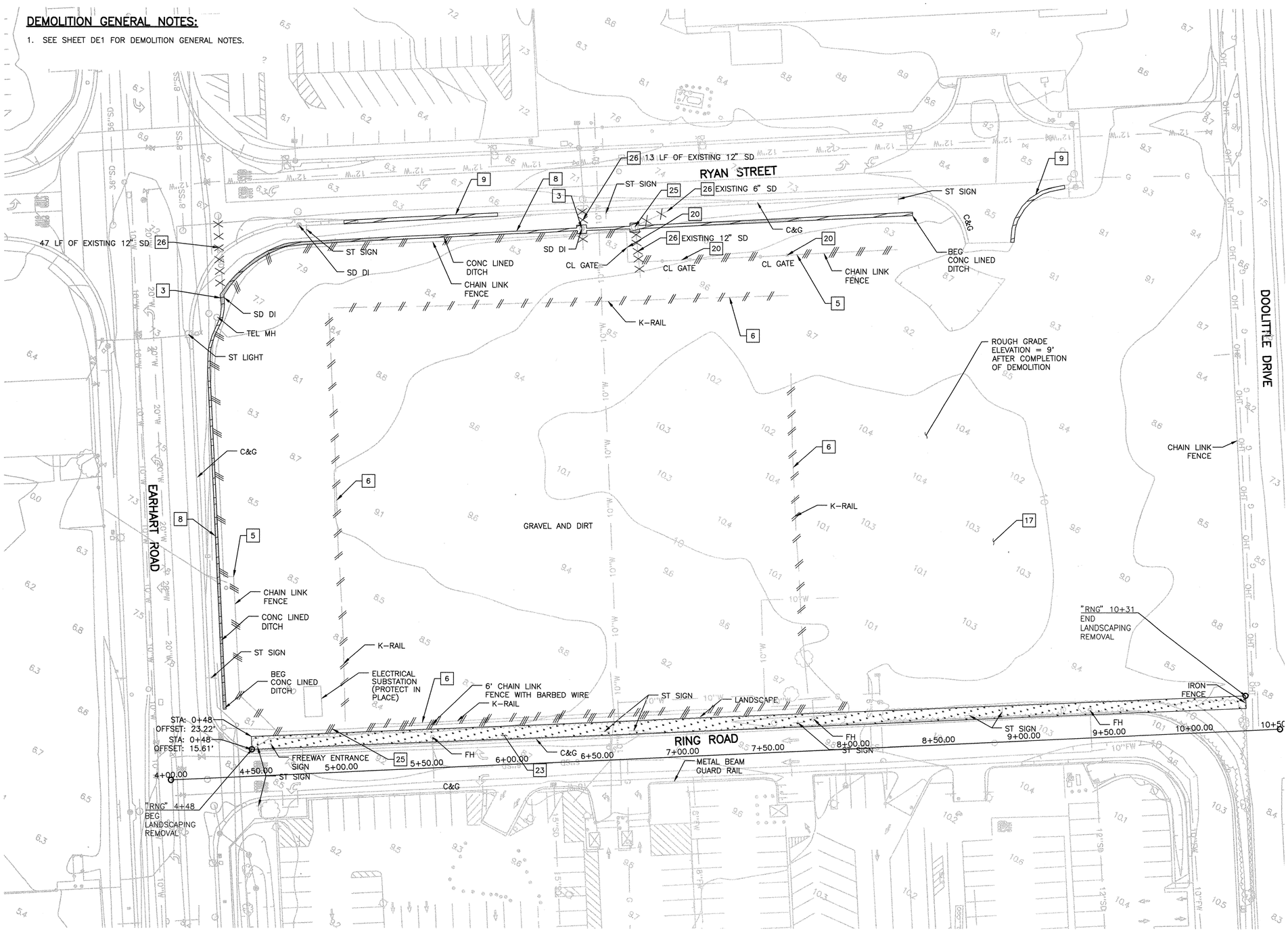


## DEMOLITION LEGEND

- REMOVE AC PAVEMENT
- REMOVE BUILDING
- REMOVE CONCRETE
- REMOVE LANDSCAPING
- REMOVE MBGR
- REMOVE AND SALVAGE K-RAIL
- REMOVE AND SALVAGE CHAINLINK FENCE
- REMOVE UTILITY
- REMOVE TREE
- LIMIT OF DEMOLITION SITE

## DEMOLITION NOTES

1. RELOCATE SIGN (SEE SIGNING AND STRIPING PLANS).
2. SALVAGE ELECTROLIER.
3. REMOVE SD INLET.
4. REMOVE TRASH ENCLOSURE FENCING. SALVAGE TRASH BINS (COORDINATE WITH PORT AND RENTAL CAR OPERATOR).
5. REMOVE AND SALVAGE CHAIN LINK FENCE.
6. REMOVE AND SALVAGE K-RAIL.
7. SALVAGE SIGN PANEL.
8. REMOVE CONCRETE LINED DITCH.
9. REMOVE CURB AND GUTTER.
10. REMOVE PAVEMENT MARKING.
11. REMOVE STRIPING.
12. REMOVE CURB.
13. REMOVE AC PAVING.
14. REMOVE RETAINING CURB.
15. REMOVE ELECTRICAL LINE.
16. REMOVE IRRIGATION BOX.
17. REMOVE ALL CONCRETE WHEEL STOPS IN PARKING LOT.
18. REMOVE MBGR.
19. REMOVE SIGN LIGHTS.
20. REMOVE AND SALVAGE GATE.
21. REMOVE SIGN PANELS AND LARGE MONUMENT SIGN AND FOUNDATION. REFER TO SECTION 02210 OF PROJECT MANUAL FOR UNDERGROUND FOUNDATION REMOVAL.
22. REMOVE SIDEWALK.
23. REMOVE LANDSCAPING.
24. REMOVE CONCRETE PAVING.
25. REMOVE SD MH.
26. REMOVE SD PIPE.
27. REMOVE IRR METER.
28. REMOVE AND SALVAGE PORT WATER METER.

## DEMOLITION NOTES:

1. ALL K-RAIL SALVAGED FROM THIS LOT WILL BE RETURNED TO LOT AT END OF PROJECT.

30' 0 30' 60'
SCALE: 1" = 30'-0"

CAUTION: THIS PLAN MAY BE REDUCED 0 1" 2" ORIGINAL SCALE

REGISTERED PROFESSIONAL ENGINEER ELIA INGELICA RODRIGUEZ No. 053594 EXP. 06-30-17 CIVIL STATE OF CALIFORNIA

PROJECT NO. A10081001

REFERENCES:
HORIZONTAL: NAD83(2011)
VERTICAL: NAVD88
PLANFILE 272-26

CAUTION:
CHECK TRACING FOR LATEST REVISIONS

| NO. | REVISIONS | DATE | REV'D | APP'D |
|---|---|---|---|---|
| | | | | |

DRAWN A. HENSCHKE
DESIGNED A. HENSCHKE C 81506 REG. ENGINEER NO.
CHECKED M. CANEPA C 48676 REG. ENGINEER NO.

PORT OF OAKLAND
530 WATER ST. OAKLAND, CALIFORNIA

MOTT MACDONALD

OAKLAND INTERNATIONAL AIRPORT
OAK RENTAL CAR CENTER IMPROVEMENTS
EXISTING CONDITIONS AND DEMOLITION 1 OF 2

DATE: 01-13-17
SCALE: 1"=30'
SHEET: 15 OF 53 SHEETS
DE7 AA-4193

PRINT DATE: 02-03-17 14:51:48 C:\pwworking\mmm\water_wastewater\ort52801\d0221851\4193-015.dwg Printed by ORT52801

## DEMOLITION LEGEND

- REMOVE AC PAVEMENT
- REMOVE BUILDING
- REMOVE CONCRETE
- REMOVE LANDSCAPING
- REMOVE MBGR
- REMOVE AND SALVAGE K-RAIL
- REMOVE AND SALVAGE CHAINLINK FENCE
- REMOVE UTILITY
- REMOVE TREE
- LIMIT OF DEMOLITION SITE

## DEMOLITION NOTES

1. RELOCATE SIGN (SEE SIGNING AND STRIPING PLANS)
2. SALVAGE ELECTROLIER
3. REMOVE SD INLET
4. REMOVE TRASH ENCLOSURE FENCING. SALVAGE TRASH BINS (COORDINATE WITH PORT AND RENTAL CAR OPERATOR)
5. REMOVE AND SALVAGE CHAIN LINK FENCE
6. REMOVE AND SALVAGE K-RAIL
7. SALVAGE SIGN PANEL
8. REMOVE CONCRETE LINED DITCH
9. REMOVE CURB AND GUTTER
10. REMOVE PAVEMENT MARKING
11. REMOVE STRIPING
12. REMOVE CURB.
13. REMOVE AC PAVING.
14. REMOVE CONCRETE RETAINING CURB.
15. REMOVE ELECTRICAL LINE.
16. REMOVE IRRIGATION BOX.
17. REMOVE ALL CONCRETE WHEEL STOPS IN PARKING LOT.
18. REMOVE MBGR.
19. REMOVE SIGN LIGHTS.
20. REMOVE AND SALVAGE GATE.
21. REMOVE SIGN PANELS AND LARGE MONUMENT SIGN AND FOUNDATION.
22. REMOVE SIDEWALK.
23. REMOVE LANDSCAPING.
24. REMOVE CONCRETE PAVING.
25. REMOVE SD MH.
26. REMOVE SD PIPE.
27. REMOVE IRRIGATION VALVE.
28. REMOVE AND SALVAGE PORT WATER METER.

## DEMOLITION GENERAL NOTES:

1. SEE SHEET DE1 FOR DEMOLITION GENERAL NOTES.

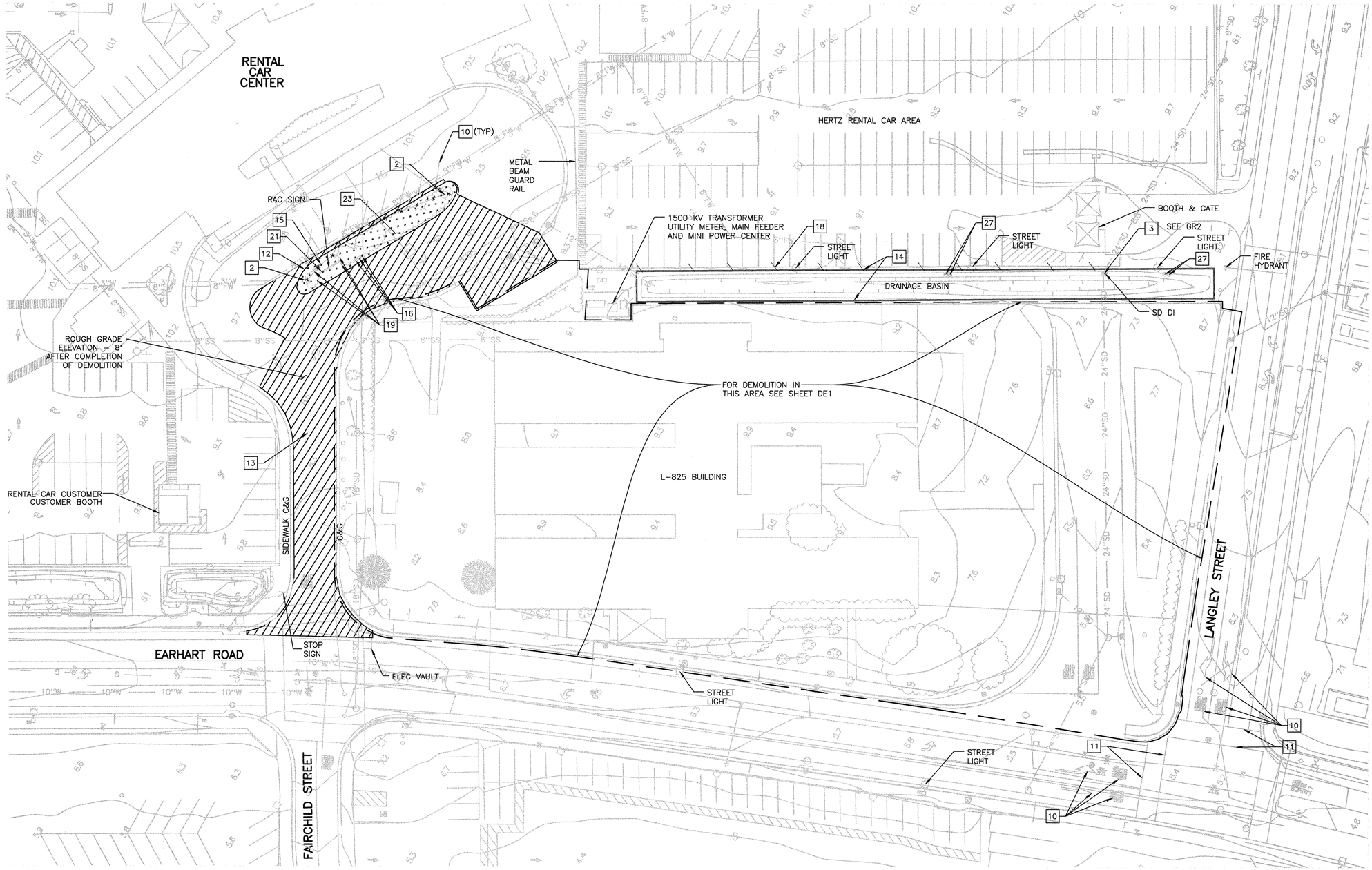


30' 0 30' 60'
SCALE: 1" = 30'-0"

CAUTION: THIS PLAN MAY BE REDUCED 0 1" 2" ORIGINAL SCALE

REGISTERED PROFESSIONAL ENGINEER OLGA WHELION RODRIGUEZ No. C53594 EXP. 06-30-17 CIVIL STATE OF CALIFORNIA

PROJECT NO. A10081001

REFERENCES:
HORIZONTAL: NAD83(2011)
VERTICAL: NAVD88
PLANFILE 272-26

CAUTION:
CHECK TRACING FOR LATEST REVISIONS

| NO. | REVISIONS | DATE | REV'D | APP'D |
|---|---|---|---|---|
| | | | | |

DRAWN A. HENSCHKE
DESIGNED A. HENSCHKE C 81506 REG. ENGINEER NO.
CHECKED M. CANEPA C 48676 REG. ENGINEER NO.

PORT OF OAKLAND
530 WATER ST. OAKLAND, CALIFORNIA

MOTT MACDONALD

OAKLAND INTERNATIONAL AIRPORT
OAK RENTAL CAR CENTER IMPROVEMENTS
EXISTING CONDITIONS AND DEMOLITION 2 OF 2

DATE: 01-13-17
SCALE: 1"=30'
SHEET: 16 OF 53 SHEETS
DE8 AA-4193

PRINT DATE 02-03-17 14:55:37 C:\pwworking\hmm\water_wastewater\ort52801\d022185\A4193-016.dwg Printed by ORT52801

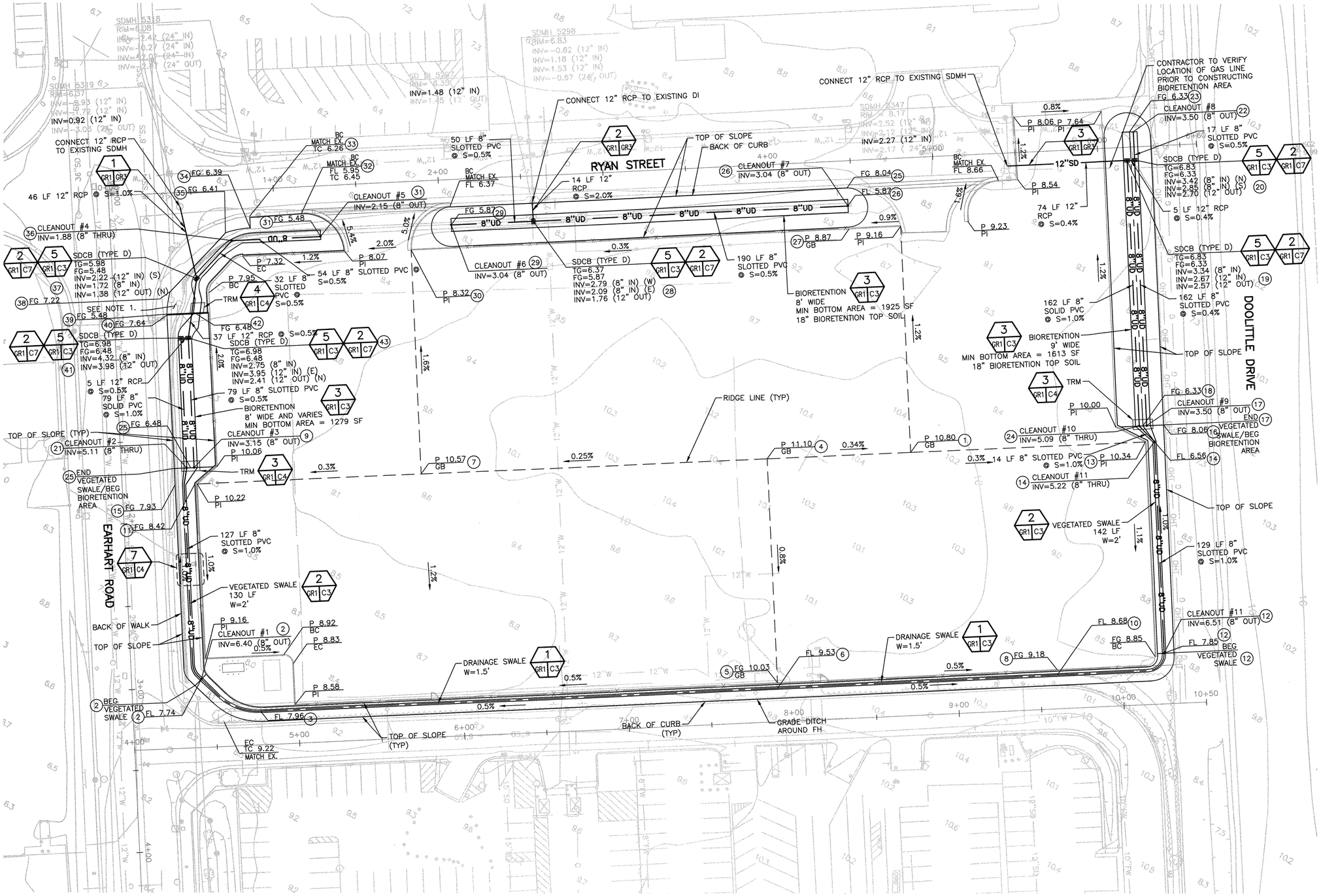


| | Northing/Easting | | |
|---|---|---|---|
| 1 | N 2096030.54 E 6065553.49 | 23 | N 2096265.98 E 6065572.59 |
| 2 | N 2095698.79 E 6065247.45 | 24 | N 2096112.97 E 6065665.97 |
| 3 | N 2095699.48 E 6065288.36 | 25 | N 2096151.61 E 6065440.62 |
| 4 | N 2095984.29 E 6065479.81 | 26 | N 2096142.31 E 6065446.50 |
| 5 | N 2095869.35 E 6065552.03 | 27 | N 2096130.49 E 6065453.99 |
| 6 | N 2095866.58 E 6065553.74 | 28 | N 2096040.22 E 6065285.28 |
| 7 | N 2095872.70 E 6065302.06 | 29 | N 2096013.54 E 6065243.14 |
| 8 | N 2095959.71 E 6065695.54 | 30 | N 2095988.34 E 6065229.51 |
| 9 | N 2095808.20 E 6065180.49 | 31 | N 2095968.34 E 6065177.80 |
| 10 | N 2095956.96 E 6065697.27 | 32 | N 2095975.24 E 6065160.87 |
| 11 | N 2095799.70 E 6065185.79 | 33 | N 2095957.68 E 6065134.34 |
| 12 | N 2096000.13 E 6065747.09 | 34 | N 2095951.78 E 6065138.22 |
| 13 | N 2096106.22 E 6065674.03 | 35 | N 2095941.84 E 6065126.64 |
| 14 | N 2096109.14 E 6065678.69 | 36 | N 2095939.79 E 6065132.19 |
| 15 | N 2095793.34 E 6065175.62 | 37 | N 2095890.79 E 6065126.13 |
| 16 | N 2096120.80 E 6065678.45 | 38 | N 2095894.12 E 6065115.17 |
| 17 | N 2096115.36 E 6065669.78 | 39 | N 2095886.49 E 6065128.68 |
| 18 | N 2096114.16 E 6065667.86 | 40 | N 2095880.76 E 6065120.53 |
| 19 | N 2096249.81 E 6065580.08 | 41 | N 2095880.64 E 6065129.70 |
| 20 | N 2096252.21 E 6065583.91 | 42 | N 2095886.07 E 6065128.95 |
| 21 | N 2095805.80 E 6065176.67 | 43 | N 2095883.04 E 6065133.53 |
| 22 | N 2096267.19 E 6065574.51 | | |

## GRADING AND DRAINAGE GENERAL NOTES

1. CLEANOUTS SHALL EXTEND 6" ABOVE FG AND BE CAPPED WITH LOCKABLE SCREW CAP.
2. SEE LAYOUT SHEETS FOR NORTHING AND EASTING LOCATIONS NOT SHOWN.
3. SEE PLANTING AND IRRIGATION PLANS FOR LANDSCAPING.
4. FOR TRENCH DETAILS SEE CITY OF OAKLAND STANDARD DRAWING D-22 ON DRAWING C6.
5. WHEN REFERENCING DRAINAGE PIPES, NORTHING AND EASTING IS SHOWN AT THE CENTER OF THE PIPE.

## GRADING AND DRAINAGE LEGEND

— — — — RIDGE LINE

## GRADING AND DRAINAGE NOTES

1. MANHOLE COVERS AND VAULT TO REMAIN IN PLACE. CONTRACTOR SHALL PROVIDE IMPROVEMENTS AND AVOID DISTURBANCES OF VAULT.

N

30' 0 30' 60'
SCALE: 1" = 30'-0"

REGISTERED PROFESSIONAL ENGINEER ELSA MELICH RODRIGUEZ No. C53594 EXP. 06-30-17 CIVIL STATE OF CALIFORNIA

CAUTION: THIS PLAN MAY BE REDUCED 0 1" 2" ORIGINAL SCALE

PROJECT NO. A10081001

REFERENCES:
HORIZONTAL: NAD83(2011)
VERTICAL: NAVD88
PLANFILE 272-26

CAUTION:
CHECK TRACING FOR LATEST REVISIONS

| NO. | REVISIONS | DATE | REV'D | APP'D |
|---|---|---|---|---|
| | | | | |

DRAWN A. HENSCHKE
DESIGNED R. CRAWFORD C 63316 REG. ENGINEER NO.
CHECKED M. CANEPA C 48676 REG. ENGINEER NO.

PORT OF OAKLAND
530 WATER ST. OAKLAND, CALIFORNIA

MOTT MACDONALD

OAKLAND INTERNATIONAL AIRPORT
OAK RENTAL CAR CENTER IMPROVEMENTS
GRADING AND DRAINAGE 1 OF 2

DATE: 01-13-17
SCALE: 1"=30'
SHEET: 17 OF 53 SHEETS
GR1 AA-4193

PRINT DATE 01-19-17 14:12:35 C:\pwworking\hmm\water_wastewater\hen68848\d0221851\4193-017.dwg Printed by HEN68848

| Northing/Easting | | | |
|---|---|---|---|
| 1 | N 2095340.45 E 6065617.02 | 26 | N 2094805.53 E 6065712.24 |
| 2 | N 2095277.30 E 6065553.49 | 27 | N 2094798.23 E 6065742.53 |
| 3 | N 2095272.49 E 6065494.38 | 28 | N 2094794.18 E 6065741.47 |
| 4 | N 2095280.70 E 6065674.88 | 29 | N 2094813.15 E 6065751.72 |
| 5 | N 2095271.74 E 6065696.47 | 30 | N 2094833.33 E 6065767.21 |
| 6 | N 2095264.50 E 6065685.22 | 31 | N 2094836.55 E 6065765.19 |
| 7 | N 2095267.50 E 6065699.13 | 32 | N 2094844.40 E 6065792.54 |
| 8 | N 2095215.23 E 6065573.04 | 33 | N 2095241.70 E 6065719.80 |
| 9 | N 2095225.50 E 6065589.02 | 34 | N 2094926.52 E 6065881.45 |
| 10 | N 2095209.34 E 6065599.41 | 35 | N 2094904.70 E 6065930.47 |
| 11 | N 2095205.13 E 6065602.11 | 36 | N 2094914.59 E 6065924.29 |
| 12 | N 2095184.74 E 6065614.79 | 37 | N 2095233.93 E 6065724.65 |
| 13 | N 2095345.57 E 6065684.71 | 38 | N 2095217.71 E 6065734.77 |
| 14 | N 2095243.00 E 6065719.06 | 39 | N 2095090.04 E 6065814.60 |
| 15 | N 2095175.42 E 6065613.93 | 40 | N 2095129.05 E 6065790.22 |
| 16 | N 2095171.87 E 6065597.51 | 41 | N 2095166.76 E 6065766.70 |
| 17 | N 2095166.97 E 6065602.51 | 42 | N 2095146.72 E 6065817.99 |
| 18 | N 2095110.71 E 6065593.80 | 43 | N 2095194.39 E 6065787.70 |
| 19 | N 2095249.15 E 6065715.17 | 44 | N 2095177.05 E 6065760.21 |
| 20 | N 2095105.40 E 6065585.53 | 45 | N 2095161.15 E 6065734.77 |
| 21 | N 2094990.19 E 6065666.80 | | |
| 22 | N 2094848.26 E 6065713.97 | | |
| 23 | N 2095120.47 E 6065594.21 | | |
| 24 | N 2095160.32 E 6065609.71 | | |
| 25 | N 2095248.72 E 6065715.41 | | |

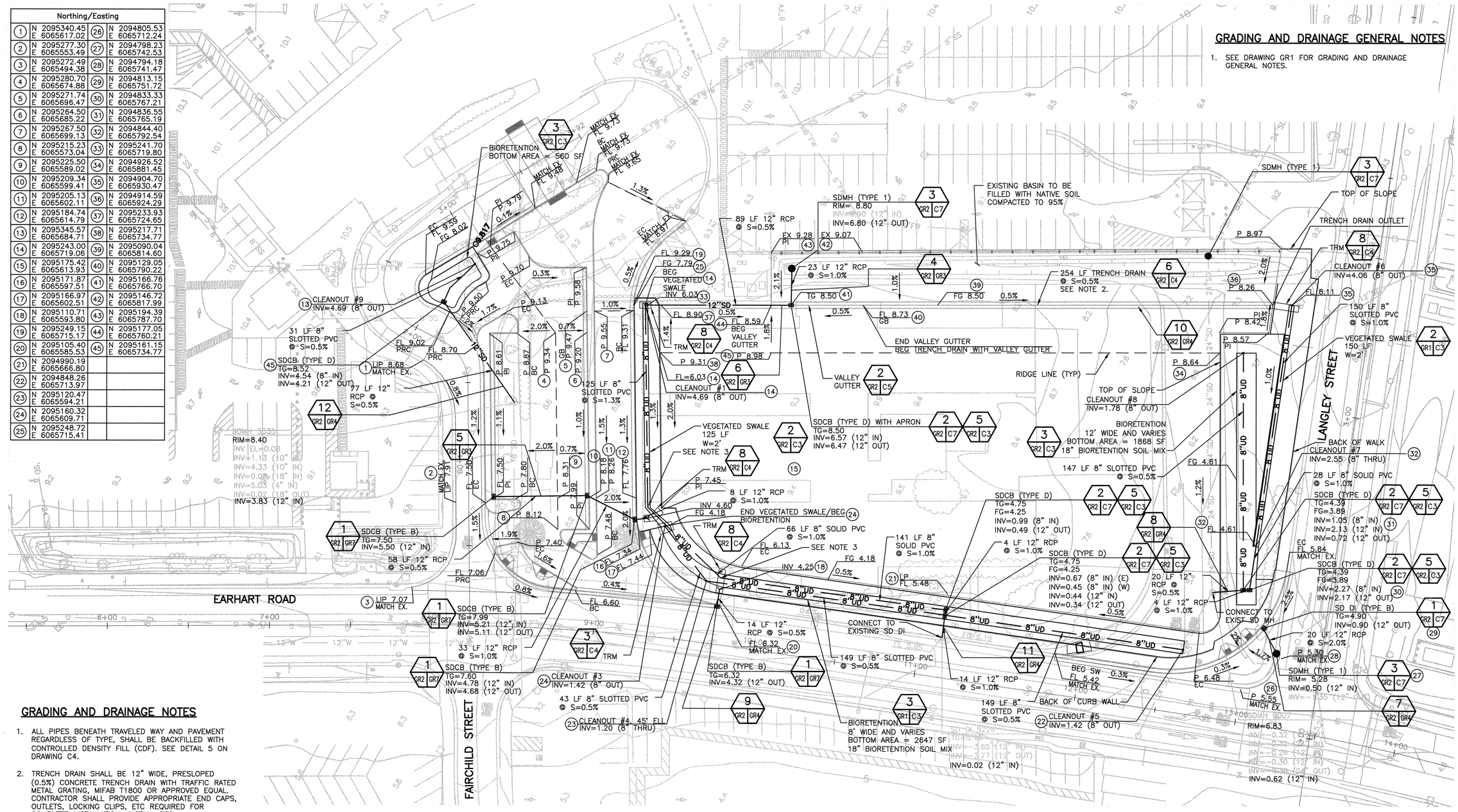


## GRADING AND DRAINAGE GENERAL NOTES

1. SEE DRAWING GR1 FOR GRADING AND DRAINAGE GENERAL NOTES.

## GRADING AND DRAINAGE NOTES

1. ALL PIPES BENEATH TRAVELED WAY AND PAVEMENT REGARDLESS OF TYPE, SHALL BE BACKFILLED WITH CONTROLLED DENSITY FILL (CDF). SEE DETAIL 5 ON DRAWING C4.
2. TRENCH DRAIN SHALL BE 12" WIDE, PRESLOPED (0.5%) CONCRETE TRENCH DRAIN WITH TRAFFIC RATED METAL GRATING, MIFAB T1800 OR APPROVED EQUAL. CONTRACTOR SHALL PROVIDE APPROPRIATE END CAPS, OUTLETS, LOCKING CLIPS, ETC REQUIRED FOR COMPLETE INSTALLATION. INSTALL PER MANUFACTURER'S RECOMMENDATIONS. AT OUTFALL TO VEGETATED SWALE, PROVIDE 10" HUB END AND 10" PIPE CUT TO MATCH SIDE SLOPE OF SWALE.
3. CONTRACTOR TO PROVIDE AT LEAST TWO ELBOWS AT THE LOCATION SHOWN ON THE PLANS.

30' 0 30' 60'
SCALE: 1" = 30'-0"

REGISTERED PROFESSIONAL ENGINEER OLGA AMELIOR RODRIGUEZ No. 053594 EXP. 06-30-17 CIVIL STATE OF CALIFORNIA

PROJECT NO. A10081001

CAUTION: THIS PLAN MAY BE REDUCED 0 1" 2" ORIGINAL SCALE

REFERENCES:
HORIZONTAL: NAD83(2011)
VERTICAL: NAVD88
PLANFILE 272-26

CAUTION:
CHECK TRACING FOR LATEST REVISIONS

| NO. | REVISIONS | DATE | REV'D | APP'D |
|---|---|---|---|---|
| | | | | |

DRAWN A. HENSCHKE
DESIGNED R. CRAWFORD C 63316 REG. ENGINEER NO.
CHECKED M. CANEPA C 48676 REG. ENGINEER NO.

PORT OF OAKLAND
530 WATER ST. OAKLAND, CALIFORNIA

MOTT MACDONALD

OAKLAND INTERNATIONAL AIRPORT
OAK RENTAL CAR CENTER IMPROVEMENTS
GRADING AND DRAINAGE 2 OF 2

DATE: 01-13-17
SCALE: 1"=30'
SHEET: 18 OF 53 SHEETS
GR2 AA-4193

PRINT DATE 02-03-17 13:01:44 C:\pwworking\nmm\wder_wastewater\hen68848\d0221851\A193-018.dwg Printed by HEN68848

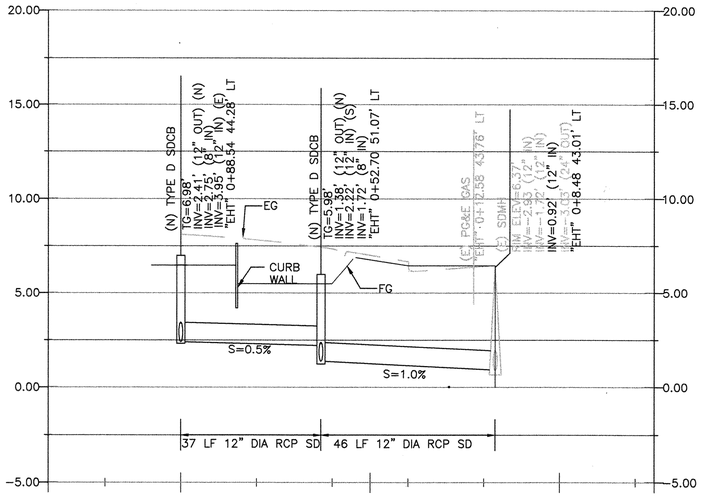


1 GR1GR3 **STORM DRAIN PROFILE**
SCALE: HORIZONTAL 1"=20'
VERTICAL 1"=4'

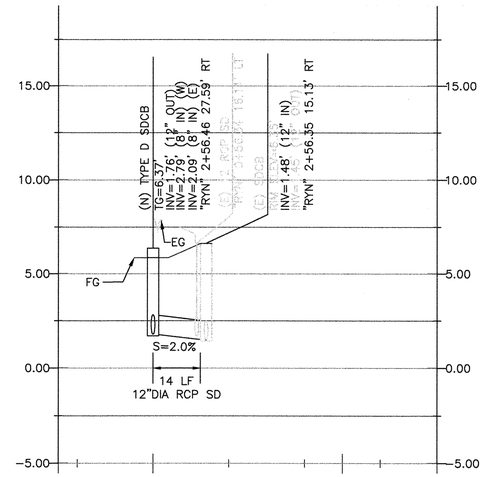


2 GR1GR3 **STORM DRAIN PROFILE**
SCALE: HORIZONTAL 1"=20'
VERTICAL 1"=4'

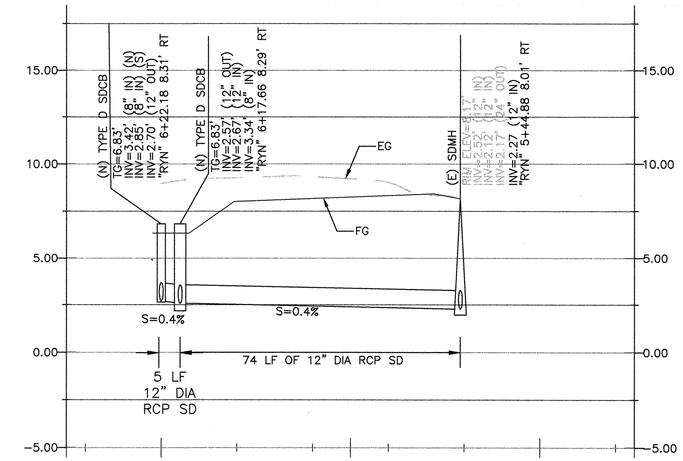


3 GR1GR3 **STORM DRAIN PROFILE**
SCALE: HORIZONTAL 1"=20'
VERTICAL 1"=4'

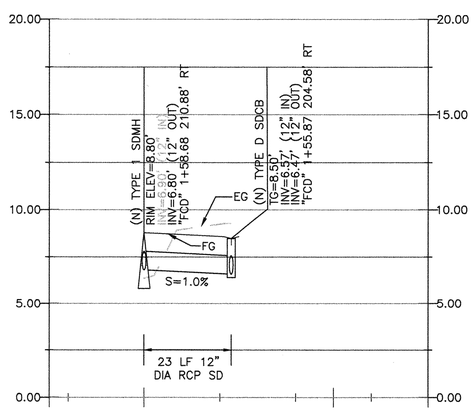


4 GR2GR3 **STORM DRAIN PROFILE**
SCALE: HORIZONTAL 1"=20'
VERTICAL 1"=4'

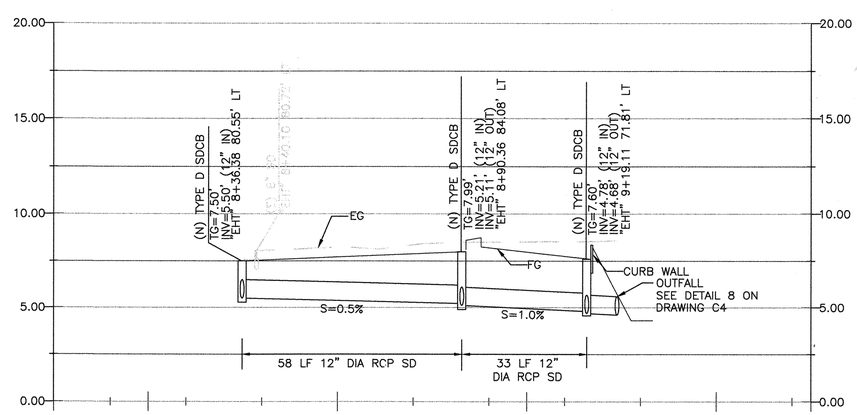


5 GR2GR3 **STORM DRAIN PROFILE**
SCALE: HORIZONTAL 1"=20'
VERTICAL 1"=4'

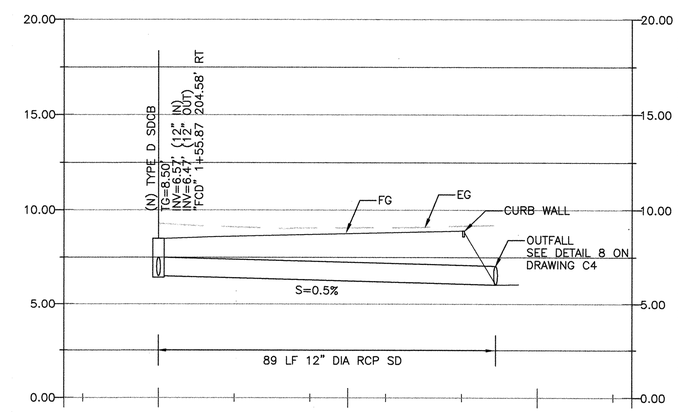


6 GR2GR3 **STORM DRAIN PROFILE**
SCALE: HORIZONTAL 1"=20'
VERTICAL 1"=4'

20' 0 20' 40'
SCALE: 1" = 20'-0"

REGISTERED PROFESSIONAL ENGINEER
OLGA MIELICH RODRIGUEZ
No. C53584
EXP. 06-30-17
CIVIL
STATE OF CALIFORNIA

PROJECT NO. A10081001

REFERENCES:
HORIZONTAL: NAD83(2011)
VERTICAL: NAVD88
PLANFILE 272-26

CAUTION:
CHECK TRACING FOR LATEST REVISIONS

| NO. | REVISIONS | DATE | REV'D | APP'D |
|---|---|---|---|---|
| | | | | |

DRAWN S. HUYNH
DESIGNED R. CRAWFORD C 63316 REG. ENGINEER NO.
CHECKED M. CANEPA C 48676 REG. ENGINEER NO.

CAUTION: THIS PLAN MAY BE REDUCED 0 1" 2" ORIGINAL SCALE

**PORT OF OAKLAND**
530 WATER ST. OAKLAND, CALIFORNIA

MOTT MACDONALD

OAKLAND INTERNATIONAL AIRPORT
**OAK RENTAL CAR CENTER IMPROVEMENTS**
**DRAINAGE PROFILE 1 OF 2**

DATE: 01-13-17
SCALE: AS SHOWN
SHEET: 19 OF 53 SHEETS
GR3 AA-4193

PRINT DATE 01-19-17 14:15:00 C:\pwworking\lmm\water_wastewater\hen68848\d0221851\4193-019.dwg Printed by HEN68848

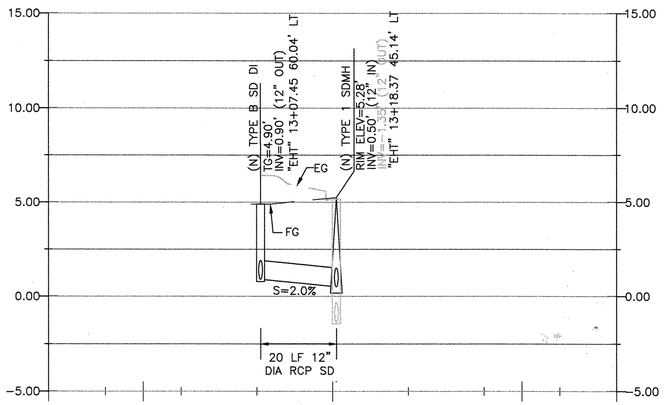


## 7 GR2GR4 STORM DRAIN PROFILE

SCALE: HORIZONTAL 1"=20'
VERTICAL 1"=4'

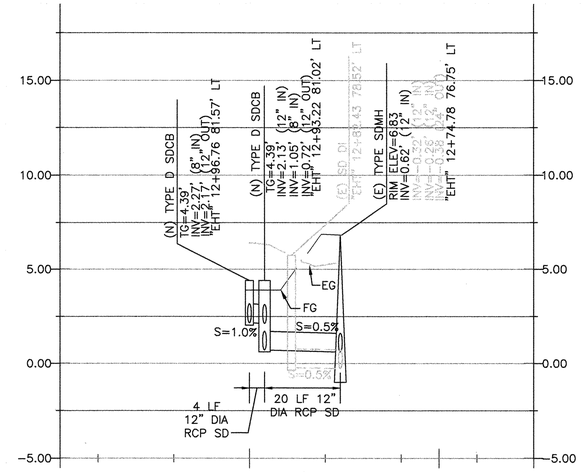


## 8 GR2GR4 STORM DRAIN PROFILE

SCALE: HORIZONTAL 1"=20'
VERTICAL 1"=4'

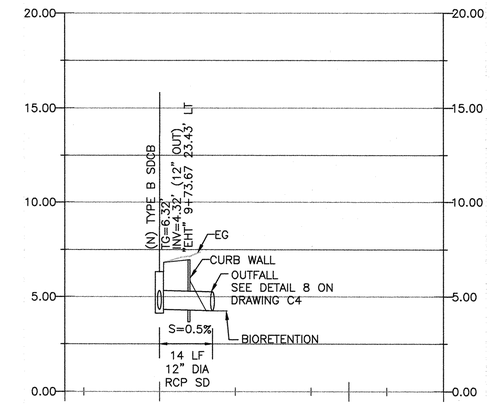


## 9 GR2GR4 STORM DRAIN PROFILE

SCALE: HORIZONTAL 1"=20'
VERTICAL 1"=4'

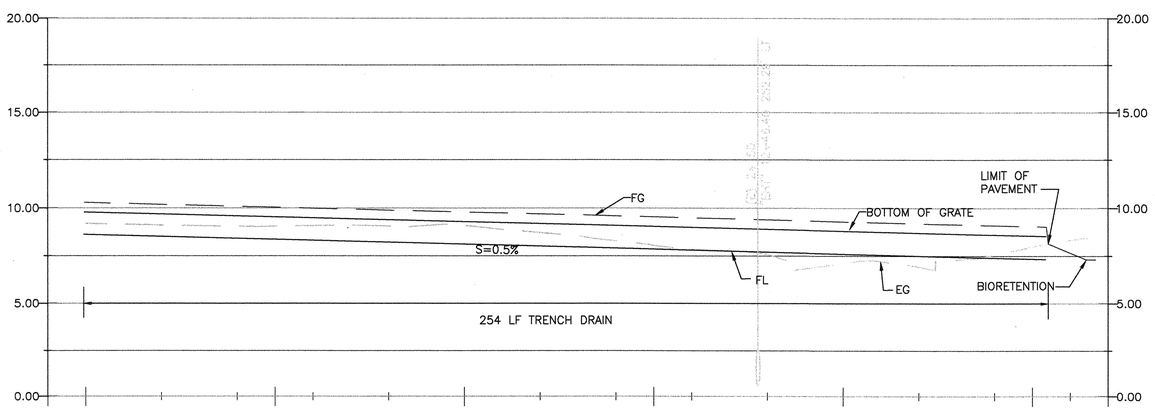


## 10 GR2GR4 STORM DRAIN PROFILE

SCALE: HORIZONTAL 1"=20'
VERTICAL 1"=4'

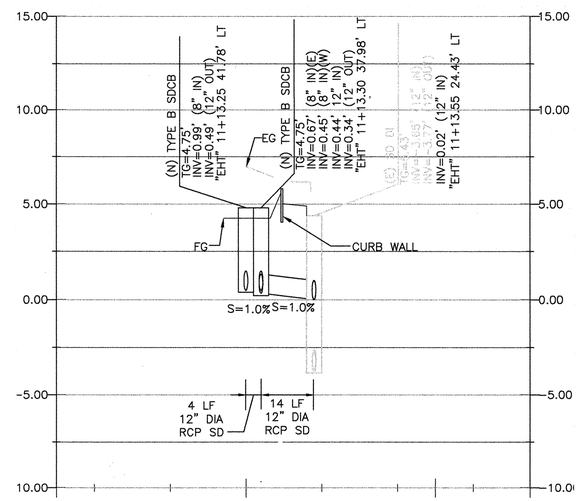


## 11 GR2GR4 STORM DRAIN PROFILE

SCALE: HORIZONTAL 1"=20'
VERTICAL 1"=4'

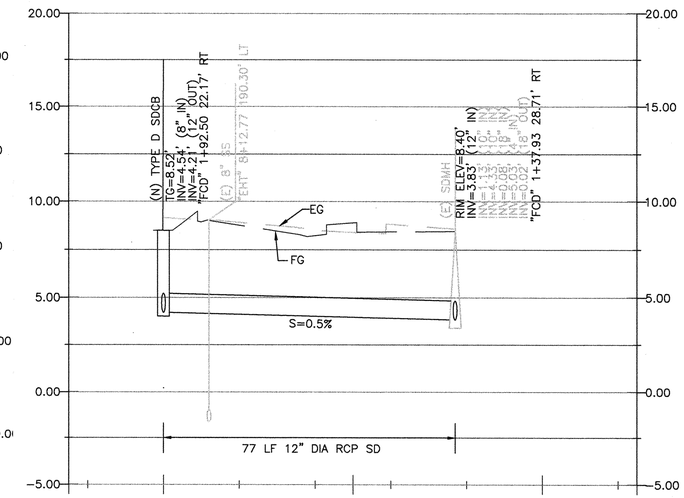


## 12 GR2GR4 STORM DRAIN PROFILE

SCALE: HORIZONTAL 1"=20'
VERTICAL 1"=4'

20' 0 20' 40'
SCALE: 1" = 20'-0"

REGISTERED PROFESSIONAL ENGINEER
OLGA MELICA RODRIGUEZ
No. C63594
EXP. 06-30-17
CIVIL
STATE OF CALIFORNIA

CAUTION: THIS PLAN MAY BE REDUCED 0 1" 2" ORIGINAL SCALE

PROJECT NO. A10081001

REFERENCES:
HORIZONTAL: NAD83(2011)
VERTICAL: NAVD88
PLANFILE 272-26

CAUTION:
CHECK TRACING FOR LATEST REVISIONS

| NO. | REVISIONS | DATE | REV'D | APP'D |
|---|---|---|---|---|
| | | | | |

DRAWN A. HENSCHKE
DESIGNED R. CRAWFORD C 63316 REG. ENGINEER NO.
CHECKED M. CANEPA C 48676 REG. ENGINEER NO.

PORT OF OAKLAND
530 WATER ST. OAKLAND, CALIFORNIA

MOTT MACDONALD

OAKLAND INTERNATIONAL AIRPORT
OAK RENTAL CAR CENTER IMPROVEMENTS
DRAINAGE PROFILE 2 OF 2

DATE: 01-13-17
SCALE: AS SHOWN
SHEET: 20 OF 53 SHEETS
GR4 AA-4193

PRINT DATE 01-19-17 14:16:13 C:\pwworking\bmm\water_wastewater\hen68848\d0221851\4193-020.dwg Printed by HEN68848

## LAYOUT GENERAL NOTES

1. FOR DEMOLITION SEE EXISTING CONDITIONS AND DEMOLITION DRAWINGS.
2. FOR STORM DRAIN DESIGN SEE GRADING AND DRAINAGE DRAWINGS.
3. FOR UTILITY RELOCATION SEE UTILITY DRAWINGS.
4. ALL NORTHING AND EASTING COORDINATE POINTS ARE AT EDGE OF PAVEMENT.

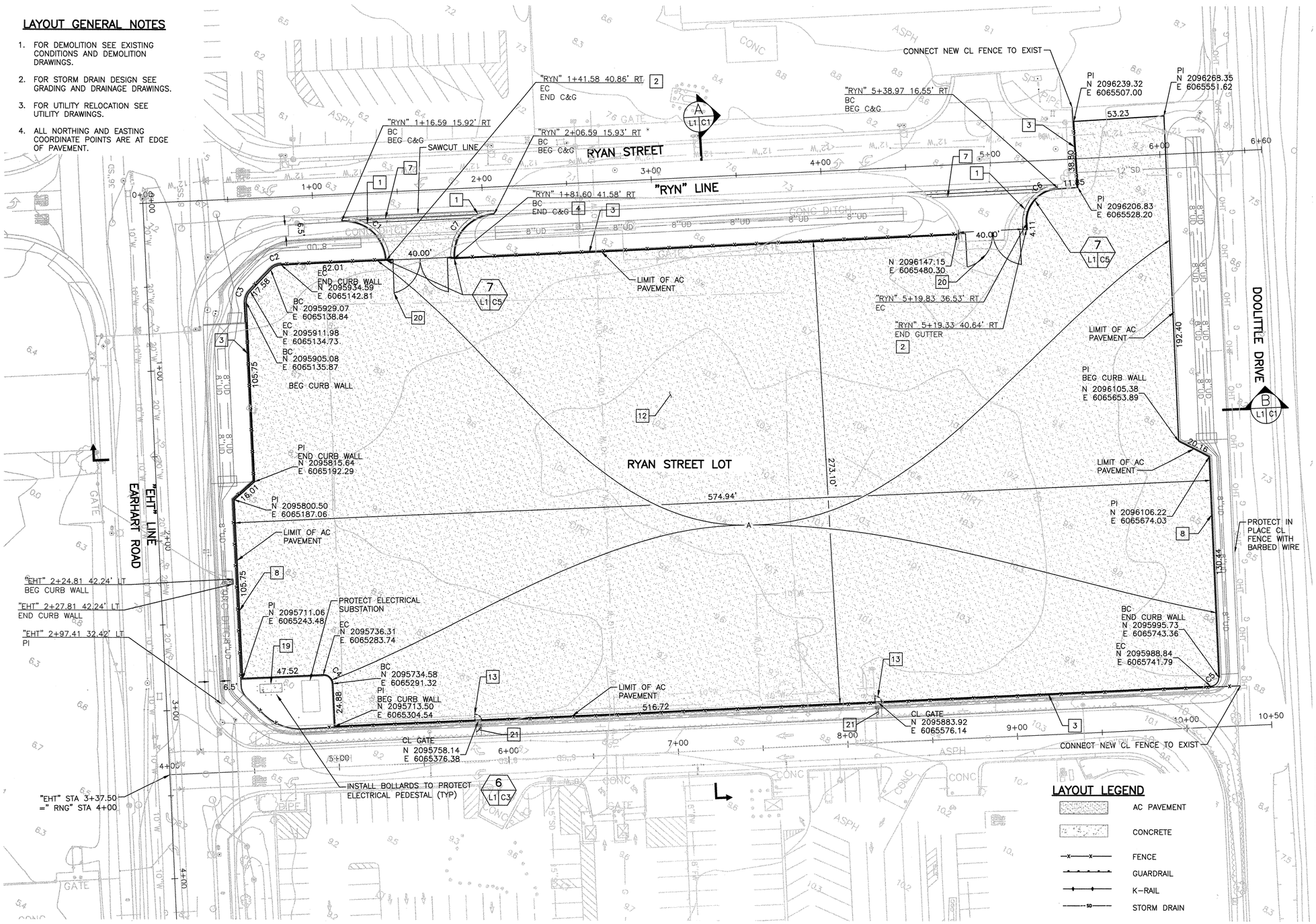


## LAYOUT NOTES

| | |
|---|---|
| 1 | CONSTRUCT TYPE A CURB AND GUTTER PER CITY OF OAKLAND STANDARD DRAWING S-1 SHOWN ON DRAWING C6. |
| 2 | CONSTRUCT CURB TRANSITION DETAIL, SEE DETAIL 7 ON DRAWING C5 |
| 3 | 6' CHAIN LINK FENCE WITH BARBED WIRE. SEE DETAIL 5 ON DRAWING C5. |
| 4 | NOT USED |
| 5 | CONSTRUCT TYPE A1 CURB PER CALTRANS STANDARD PLAN A87A. |
| 6 | RELOCATE BIKE RACK. |
| 7 | CONSTRUCT VALLEY GUTTER PER DETAIL 2 ON DRAWING C5. |
| 8 | CONSTRUCT CURB WALL PER DETAIL 1 ON DRAWING C4. |
| 9 | METAL BEAM GUARDRAIL PER CALTRANS STANDARD PLAN A77L1 AND DETAIL 9 ON DRAWING C4. |
| 10 | CONSTRUCT CURB RAMP CASE C MODIFIED PER DETAIL 4 ON DRAWING C5. |
| 11 | DETECTABLE WARNING SURFACE PER CALTRANS STANDARD PLAN RSPA88A. |
| 12 | CONSTRUCT PAVEMENT SECTION PER PAVEMENT SECTION TABLE ON DRAWING L1. |
| 13 | 4' PEDESTRIAN GATE PER CALTRANS STANDARD PLAN RSPA85A. |
| 14 | CONSTRUCT ISLAND PAVING PER DETAIL 3 ON DRAWING C5. |
| 15 | PLACE SALVAGED K-RAIL AS DIRECTED BY PORT ENGINEER. |
| 16 | CONSTRUCT 2' WIDE CURB OPENING PER DETAIL 2 ON DRAWING C4. |
| 17 | RAISED CROSSWALK PER DETAIL 6 ON DRAWING C5. |
| 18 | CONSTRUCT TRENCH DRAIN PER DETAIL 6 ON DRAWING C4. |
| 19 | ELECTRICAL SERVICE PEDESTAL, SEE LT3 |
| 20 | 42' DOUBLE SWING GATE PER CALTRANS STANDARD PLAN RSP A85. |
| 21 | 3' WIDE CONCRETE PEDESTRIAN PATH. SEE DETAIL 8 ON DRAWING C3. |

**Curve Table**

| Curve # | Radius | Length | Delta |
|---|---|---|---|
| C1 | 25.00 | 39.21 | 089°52'19.84" |
| C2 | 9.00 | 6.97 | 044°23'09.32" |
| C3 | 9.00 | 7.19 | 045°45'24.13" |
| C4 | 5.50 | 8.64 | 090°00'00.00" |
| C5 | 5.00 | 7.85 | 089°54'38.51" |
| C6 | 19.50 | 30.26 | 088°55'15.83" |
| C7 | 25.00 | 39.16 | 089°45'04.28" |

## NEW PAVEMENT SECTIONS

| | LOCATION | AC TYPE A THICKNESS (IN) | AB TYPE B THICKNESS (IN) | ACB TYPE B THICKNESS (IN) |
|---|---|---|---|---|
| A | RYAN ST LOT | 4 | 9 | ——— |
| B | INGRESS/ EGRESS | 4 | ——— | 10.5 |
| C | L-825 LOT | 4 | 9 | ——— |
| D | LANGLEY @ EARHART | 4 | ——— | 10.5 |

## LAYOUT LEGEND

- AC PAVEMENT
- CONCRETE
- FENCE
- GUARDRAIL
- K-RAIL
- STORM DRAIN

CAUTION: THIS PLAN MAY BE REDUCED 0 1" 2" ORIGINAL SCALE

30' 0 30' 60'
SCALE: 1" = 30'-0"

REGISTERED PROFESSIONAL ENGINEER OLGA ANGELICA RODRIGUEZ No. 053594 EXP. 06-30-17 CIVIL STATE OF CALIFORNIA

PROJECT NO. A10081001

REFERENCES:
HORIZONTAL: NAD83(2011)
VERTICAL: NAVD88
PLANFILE 272-26

CAUTION:
CHECK TRACING FOR LATEST REVISIONS

| NO. | REVISIONS | DATE | REV'D | APP'D |
|---|---|---|---|---|
| | | | | |

DRAWN A. HENSCHKE
DESIGNED A. HENSCHKE C 81506 REG. ENGINEER NO.
CHECKED M. CANEPA C 48676 REG. ENGINEER NO.

PORT OF OAKLAND
530 WATER ST. OAKLAND, CALIFORNIA

MOTT MACDONALD

OAKLAND INTERNATIONAL AIRPORT
OAK RENTAL CAR CENTER IMPROVEMENTS
LAYOUT 1 OF 2

DATE: 01-13-17
SCALE: 1"=30'
SHEET: 21 OF 53 SHEETS
L1 AA-4193

PRINT DATE 02-03-17 12:12:48 C:\pwworking\tmm\water_westwater\hen68848\d0221851\14193-021.dwg Printed by HEN68848

## LAYOUT GENERAL NOTES

1. SEE DRAWING L1 FOR LAYOUT GENERAL NOTES.

| Curve Table | | | |
|---|---|---|---|
| Curve # | Radius | Length | Delta |
| C21 | 3.00 | 5.71 | 109°02'53.82" |
| C22 | 45.00 | 41.88 | 053°19'02.86" |
| C23 | 1.00 | 2.67 | 153°11'02.45" |
| C24 | 20.00 | 14.93 | 042°46'04.99" |
| C25 | 3.00 | 3.85 | 073°32'45.34" |
| C26 | 7.00 | 12.33 | 100°53'39.10" |
| C27 | 3.00 | 4.14 | 079°06'20.90" |
| C28 | 3.00 | 4.71 | 090°00'00.00" |
| C29 | 1.00 | 1.57 | 089°58'17.04" |
| C30 | 7.02 | 14.70 | 119°55'53.71" |
| C31 | 10.00 | 14.10 | 080°47'41.08" |
| C32 | 50.00 | 18.09 | 020°43'34.97" |
| C33 | 5.00 | 7.85 | 090°00'00.00" |
| C34 | 30.00 | 19.08 | 036°26'14.54" |
| C35 | 5.00 | 8.48 | 097°09'31.79" |
| C36 | 70.00 | 13.49 | 011°02'43.79" |
| C37 | 10.45 | 22.98 | 126°01'46.76" |
| C38 | 5.30 | 13.39 | 144°46'22.07" |
| C39 | 60.00 | 31.81 | 030°22'47.85" |
| C40 | 3.00 | 6.38 | 121°49'16.63" |
| C41 | 8.00 | 8.12 | 058°07'33.29" |
| C42 | 3.00 | 4.64 | 088°36'40.14" |
| C43 | 15.00 | 15.57 | 059°28'54.24" |
| C45 | 60.00 | 58.23 | 055°36'19.88" |
| C46 | 51.68 | 8.94 | 009°54'54.11" |
| C47 | 45.91 | 26.45 | 033°00'56.65" |
| C48 | 11.00 | 18.99 | 098°55'21.44" |
| C49 | 72.00 | 113.27 | 090°08'00.68" |
| C50 | 52.43 | 54.02 | 059°02'11.62" |
| C51 | 64.57 | 35.49 | 031°29'22.93" |

30' 0 30' 60'
SCALE: 1" = 30'-0"

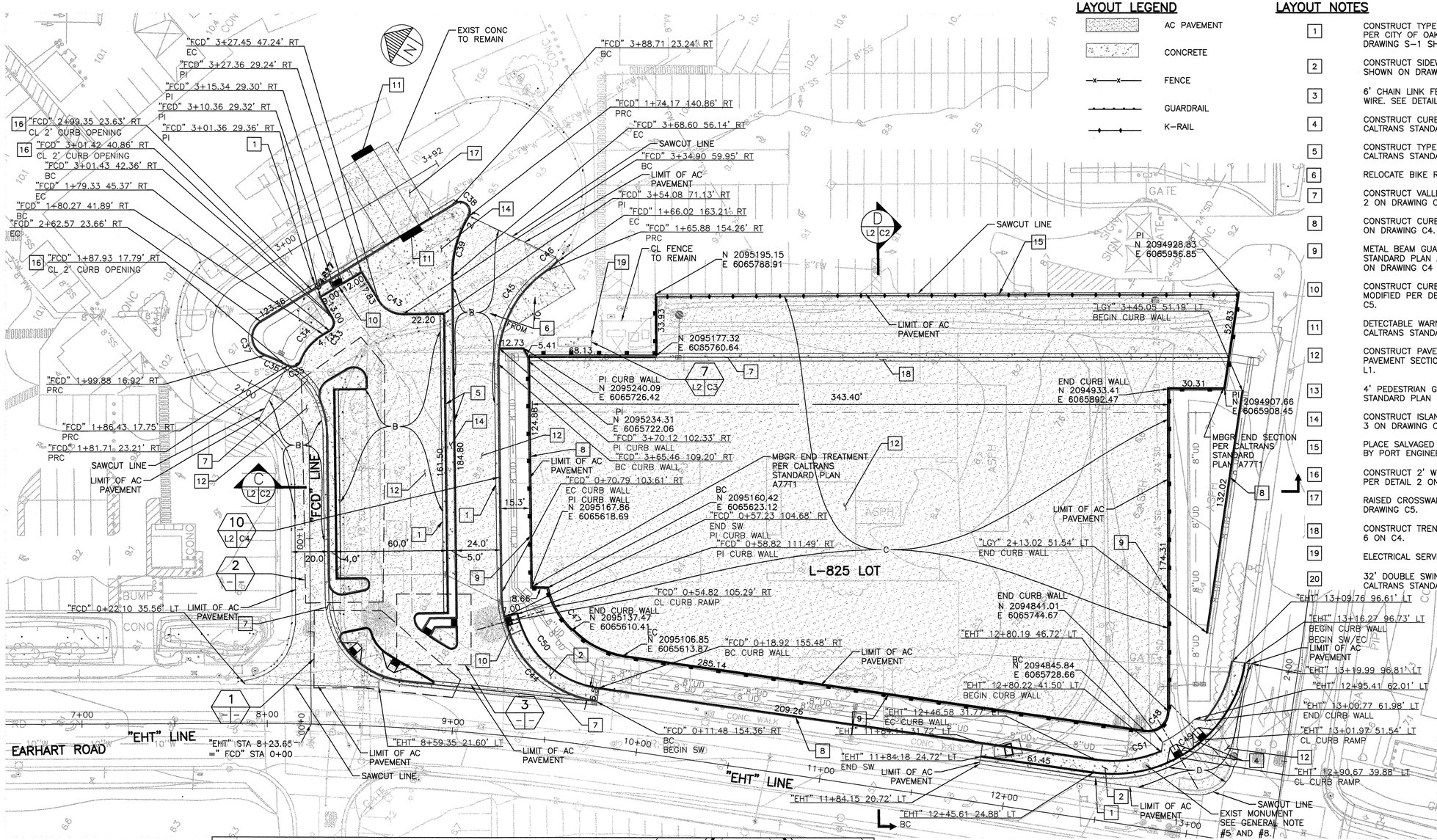


## LAYOUT LEGEND

- AC PAVEMENT
- CONCRETE
- FENCE
- GUARDRAIL
- K-RAIL

## LAYOUT NOTES

1. CONSTRUCT TYPE A CURB AND GUTTER PER CITY OF OAKLAND STANDARD DRAWING S-1 SHOWN ON DRAWING C6.
2. CONSTRUCT SIDEWALK PER DETAIL 1 SHOWN ON DRAWING C5.
3. 6' CHAIN LINK FENCE WITH BARBED WIRE. SEE DETAIL 5 ON DRAWING C5.
4. CONSTRUCT CURB RAMP CASE A PER CALTRANS STANDARD PLAN RSP A88A.
5. CONSTRUCT TYPE A1 CURB PER CALTRANS STANDARD PLAN A87A.
6. RELOCATE BIKE RACK.
7. CONSTRUCT VALLEY GUTTER PER DETAIL 2 ON DRAWING C5.
8. CONSTRUCT CURB WALL PER DETAIL 1 ON DRAWING C4.
9. METAL BEAM GUARDRAIL PER CALTRANS STANDARD PLAN A77L1 AND DETAIL 9 ON DRAWING C4
10. CONSTRUCT CURB RAMP CASE C MODIFIED PER DETAIL 4 ON DRAWING C5.
11. DETECTABLE WARNING SURFACE PER CALTRANS STANDARD PLAN RSPA88A.
12. CONSTRUCT PAVEMENT SECTION PER PAVEMENT SECTION TABLE ON DRAWING L1.
13. 4' PEDESTRIAN GATE PER CALTRANS STANDARD PLAN RSPA85A.
14. CONSTRUCT ISLAND PAVING PER DETAIL 3 ON DRAWING C5.
15. PLACE SALVAGED K-RAIL AS DIRECTED BY PORT ENGINEER.
16. CONSTRUCT 2' WIDE CURB OPENING PER DETAIL 2 ON DRAWING C4.
17. RAISED CROSSWALK PER DETAIL 6 ON DRAWING C5.
18. CONSTRUCT TRENCH DRAIN PER DETAIL 6 ON C4.
19. ELECTRICAL SERVICE PEDESTAL SEE LT3
20. 32' DOUBLE SWING GATE PER CALTRANS STANDARD PLAN RSP A85.

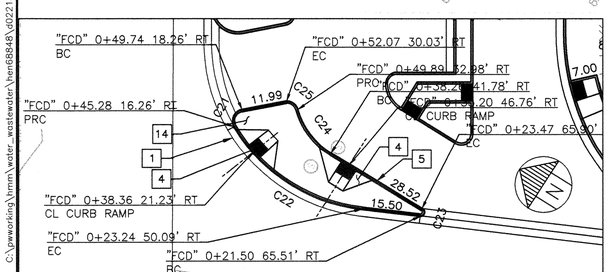


1 — 1 — 1"=20'
## EARHART CONCRETE ISLAND

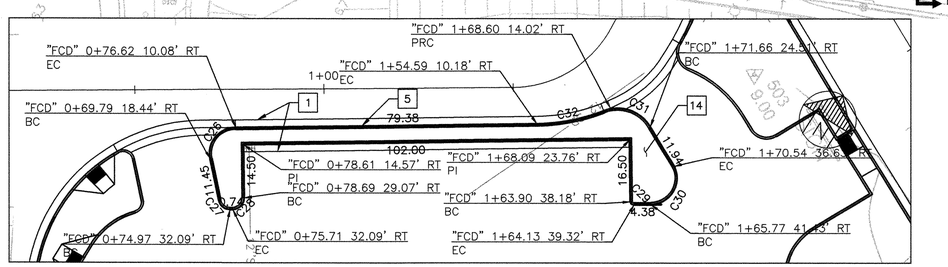


2 — 1 — 1"=20'
## FAIRCHILD CONCRETE ISLAND

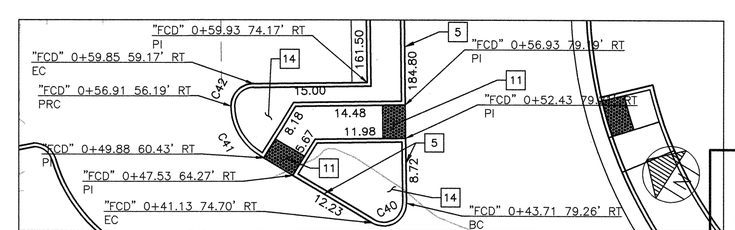


3 — 1 — 1"=10'
## ISLAND PASSAGEWAY

CAUTION: THIS PLAN MAY BE REDUCED 0 1" 2" ORIGINAL SCALE

PROJECT NO. A1008/001

REFERENCES:
HORIZONTAL: NAD83(2011)
VERTICAL: NAVD88
PLANFILE 272-26

CAUTION:
CHECK TRACING FOR LATEST REVISIONS

| NO. | REVISIONS | DATE | REV'D | APP'D |
|---|---|---|---|---|
| | | | | |

DRAWN A. HENSCHKE
DESIGNED A. HENSCHKE C 81506 REG. ENGINEER NO.
CHECKED M. CANEPA C 48676 REG. ENGINEER NO.

PORT OF OAKLAND
530 WATER ST. OAKLAND, CALIFORNIA

MOTT MACDONALD

OAKLAND INTERNATIONAL AIRPORT
OAK RENTAL CAR CENTER IMPROVEMENTS
LAYOUT 2 OF 2

DATE: 04-13-17
SCALE: 1"=30'
SHEET: 22 OF 53 SHEETS
L2 AA-4193

REGISTERED PROFESSIONAL ENGINEER ELIA MELICH RODRIGUEZ No. C53594 EXP. 06-30-17 CIVIL STATE OF CALIFORNIA

PRINT DATE 01-19-17 16:31:25 C:\pwworking\bmm\water_wastewater\hen68848\d021851\A4193-022.dwg Printed by HEN68848

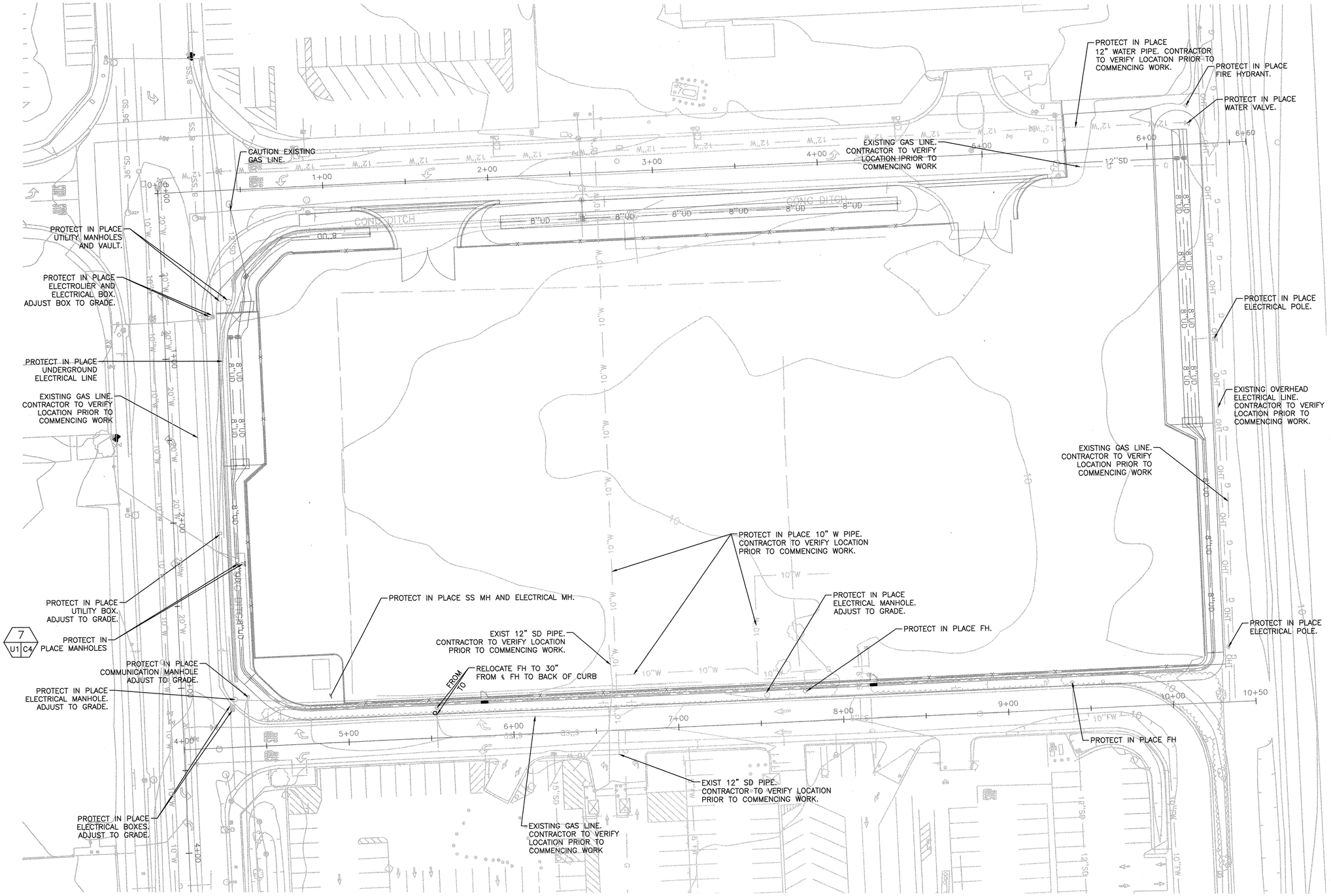


## UTILITY GENERAL NOTES

1. FOR STORM DRAIN RELOCATION AND DESIGN SEE GRADING AND DRAINAGE DRAWINGS.
2. FOR PULL BOXES/MANHOLES IN TRAFFIC AREAS, INCLUDING VEHICLE TRAFFIC AND PEDESTRIAN TRAFFIC, RAISE BOX COVER TO FLUSH WITH NEW GRADE. FOR PULL BOXES/MAHOLES IN NON-TRAFFIC AREA, RAISED BOX COVER TO 2" ABOVE NEW GRADE AND PROVIDE ASPHALT/CONCRETE/DIRT TO MATCH SURROUNDING AND AS REQUIRED TO GENTLY SLOPE AWAY FROM RIM TO FINISHED GRADE.
3. REPLACE THE EXISTING PULL BOX WITH H-20 TRAFFIC BOX. BOX COVER SHALL BE FLUSH WITH THE NEW GRADE. EXISTING CONDUITS AND WIRINGS TO REMAIN UNCHANGED UNLESS OTHER NOTED. MAKE ADJUSTMENT TO CONDUITS ENTERING THE BOX IF NECESSARY.

CAUTION: THIS PLAN MAY BE REDUCED 0 1" 2" ORIGINAL SCALE

30' 0 30' 60'
SCALE: 1" = 30'-0"

REGISTERED PROFESSIONAL ENGINEER ALAN MELICK RODRIGUEZ No. C53594 EXP. 06-30-17 CIVIL STATE OF CALIFORNIA

PROJECT NO. A10081001

REFERENCES:
HORIZONTAL: NAD83(2011)
VERTICAL: NAVD88
PLANFILE 272-26

CAUTION:
CHECK TRACING FOR LATEST REVISIONS

| NO. | REVISIONS | DATE | REV'D | APP'D |
|---|---|---|---|---|
| | | | | |

DRAWN A. HENSCHKE
DESIGNED A. HENSCHKE C 81506 REG. ENGINEER NO.
CHECKED M. CANEPA C 48676 REG. ENGINEER NO.

PORT OF OAKLAND
530 WATER ST. OAKLAND, CALIFORNIA

MOTT MACDONALD

OAKLAND INTERNATIONAL AIRPORT

OAK RENTAL CAR CENTER IMPROVEMENTS

UTILITY 1 OF 2

DATE: 01-13-17
SCALE: 1"=30'
SHEET: 23 OF 53 SHEETS
U1 AA-4193

PRINT DATE 02-03-17 12:25:00 C:\pwworking\hmm\water_wastewater\hen68848\d0221851\4193-023.dwg Printed by HEN68848

## UTILITY GENERAL NOTES

1. SEE DRAWING U1 FOR UTILITY GENERAL NOTES.

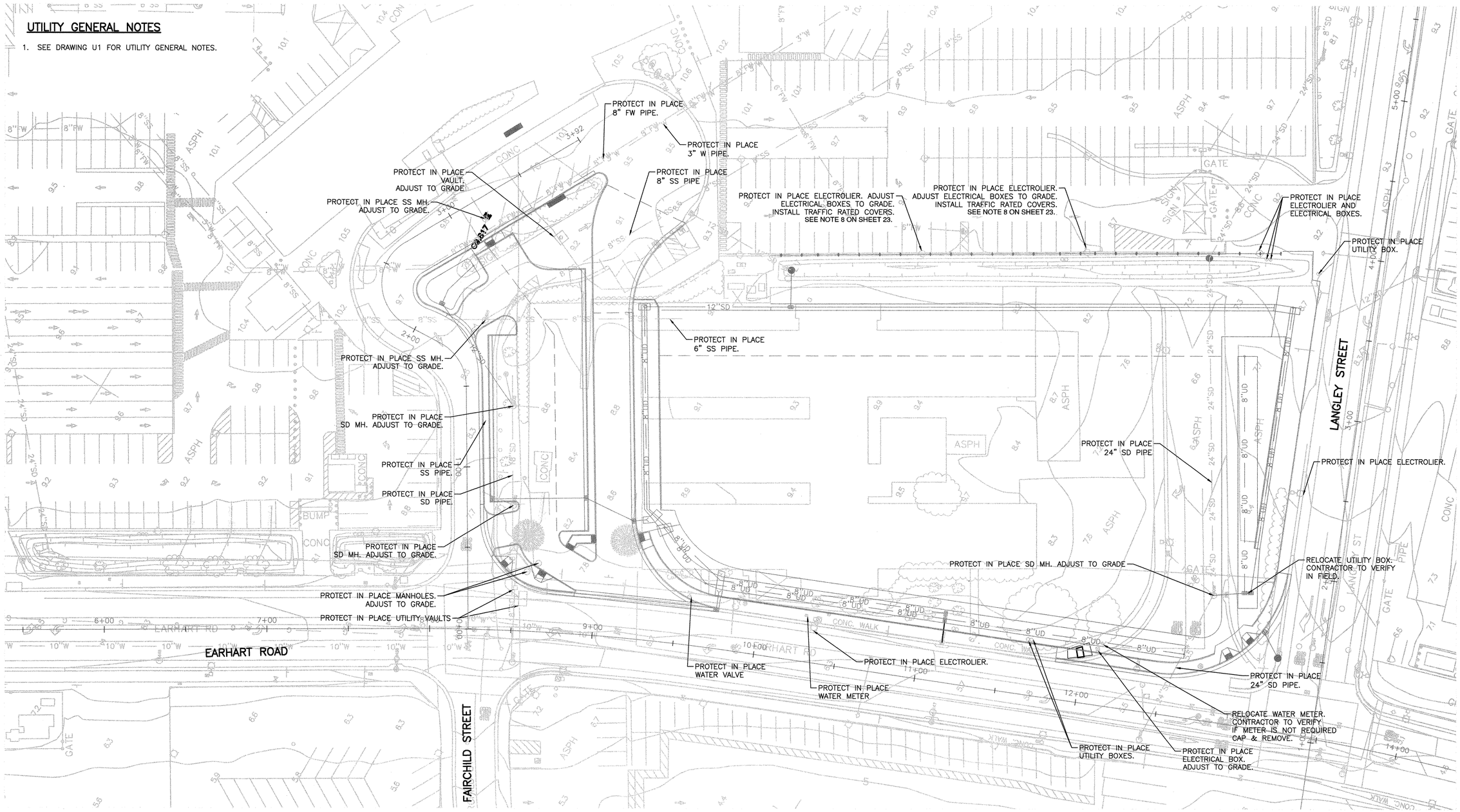


30' 0 30' 60'
SCALE: 1" = 30'-0"

CAUTION: THIS PLAN MAY BE REDUCED 0 1" 2" ORIGINAL SCALE

REGISTERED PROFESSIONAL ENGINEER ELIA ANGELICA RODRIGUEZ No. 053504 EXP. 06-30-17 CIVIL STATE OF CALIFORNIA

PROJECT NO. A10081001

REFERENCES:
HORIZONTAL: NAD83(2011)
VERTICAL: NAVD88
PLANFILE 272-26

CAUTION:
CHECK TRACING FOR LATEST REVISIONS

| NO. | REVISIONS | DATE | REV'D | APP'D |
|---|---|---|---|---|
| | | | | |

DRAWN A. HENSCHKE
DESIGNED A. HENSCHKE C 81506 REG. ENGINEER NO.
CHECKED M. CANEPA C 48676 REG. ENGINEER NO.

PORT OF OAKLAND
530 WATER ST. OAKLAND, CALIFORNIA

MOTT MACDONALD

OAKLAND INTERNATIONAL AIRPORT
OAK RENTAL CAR CENTER IMPROVEMENTS
UTILITY 2 OF 2

DATE: 01-13-17
SCALE: 1"=30'
SHEET: 24 OF 53 SHEETS
U2 AA-4193

PRINT DATE 01-19-17 14:22:35 C:\pwworking\mmm\water_wastewater\hen68848\d0221851\4153-026.dwg Plotted by HEN68848

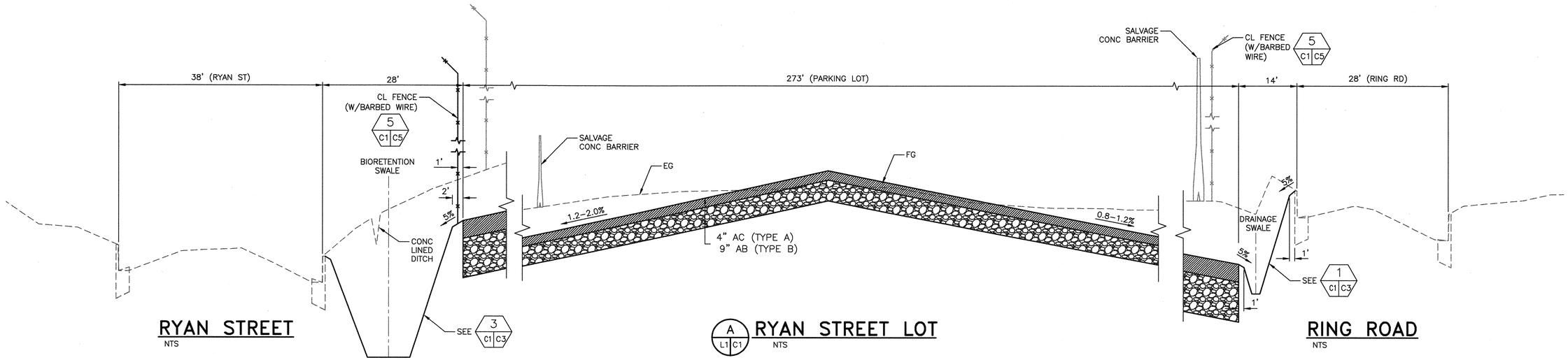


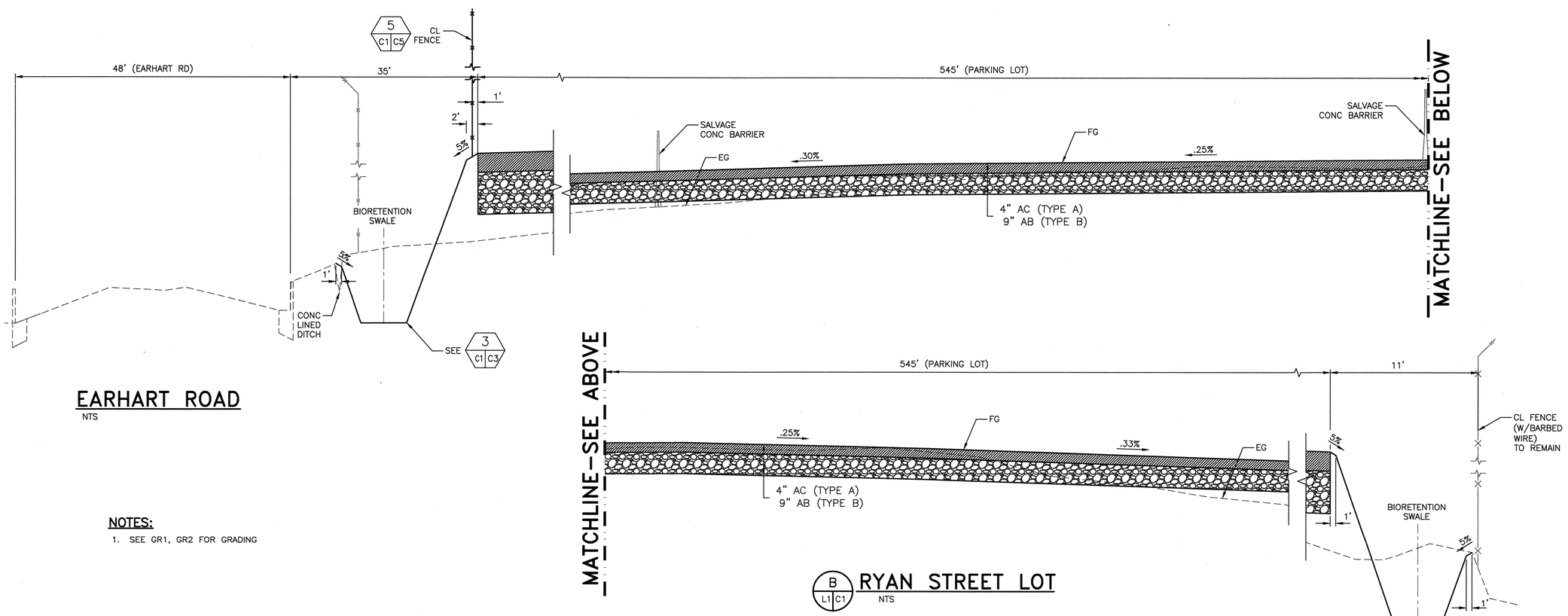


**NOTES:**

1. SEE GR1, GR2 FOR GRADING

CAUTION: THIS PLAN MAY BE REDUCED 0 1" 2" ORIGINAL SCALE

REGISTERED PROFESSIONAL ENGINEER OLGA AVELICA RODRIGUEZ No. C53594 EXP. 29-Jun-17 CIVIL STATE OF CALIFORNIA

PROJECT NO. A10081001

REFERENCES:
HORIZONTAL: NAD83(2011)
VERTICAL: NAVD88
PLANFILE 272–26

CAUTION:
CHECK TRACING FOR LATEST REVISIONS

| NO. | REVISIONS | DATE | REV'D | APP'D |
|---|---|---|---|---|
| | | | | |

DRAWN V. ORTEGA
DESIGNED O. RODRIGUEZ C 52594 REG. ENGINEER NO.
CHECKED M. CANEPA C 48676 REG. ENGINEER NO.

PORT OF OAKLAND
530 WATER ST. OAKLAND, CALIFORNIA

MOTT MACDONALD

OAKLAND INTERNATIONAL AIRPORT
OAK RENTAL CAR CENTER IMPROVEMENTS
CROSS SECTION 1 OF 2

DATE: 01-13-17
SCALE: NO SCALE
SHEET: 25 OF 53 SHEETS
C1 AA-4193

PRINT DATE 01-31-17 11:32:14 C:\pwworking\nmm\water_wastewater\wen68848\d0221185\AA193-025.dwg Printed by HEN68848

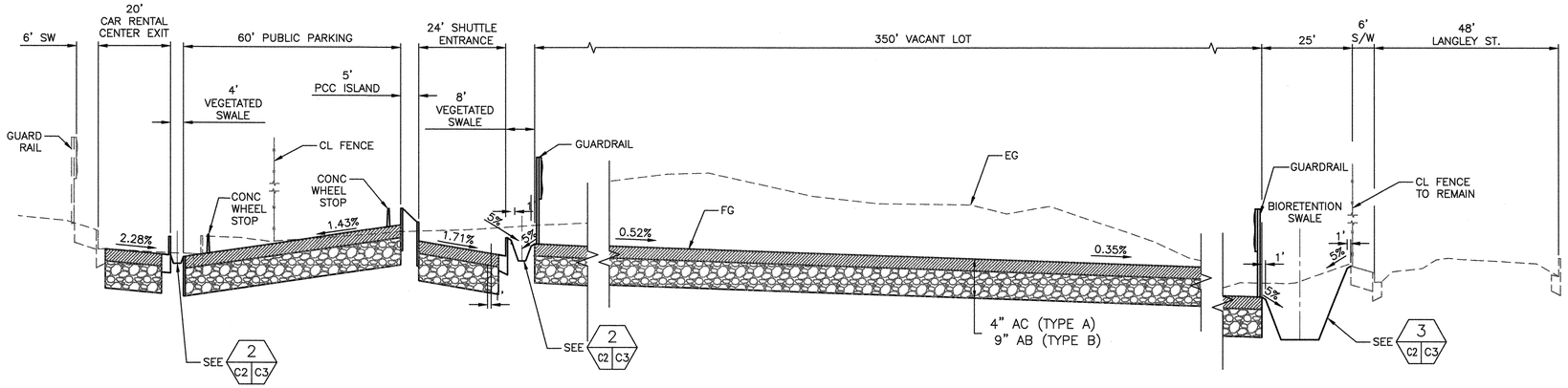


## DRIVEWAY AND PARKING

NTS

## C L2 C2 L-825 LOT

NTS

## LANGLEY STREET

NTS

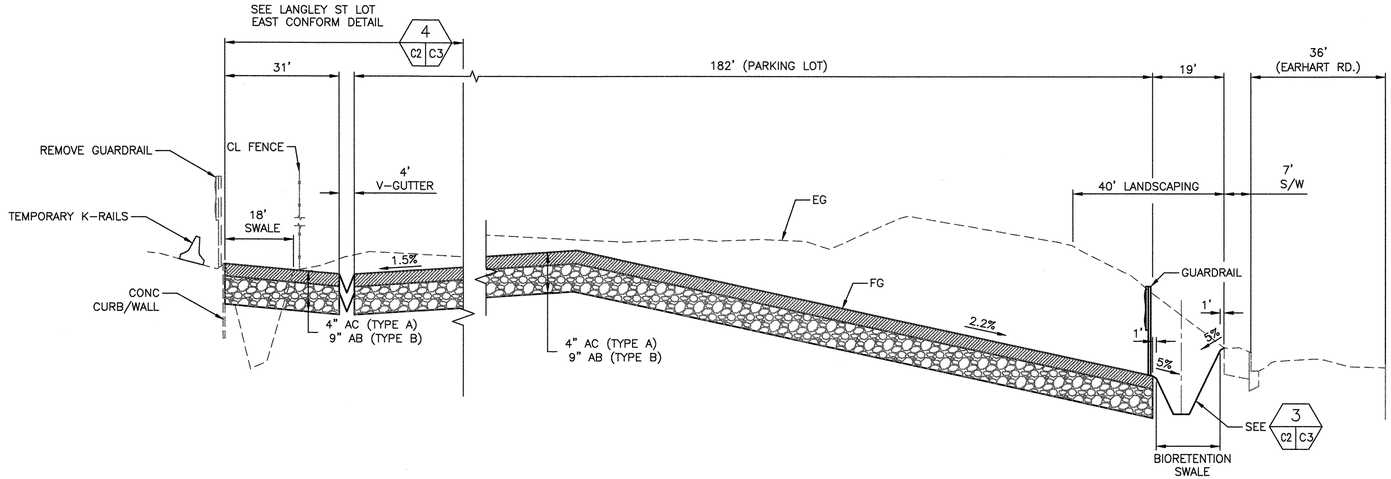


## NORTHEAST SIDE OF LOT

NTS

## D L2 C2 L-825 LOT

NTS

### CROSS SECTION GENERAL NOTES:

1. SEE DRAWING C1 FOR CROSS SECTION GENERAL NOTES.

REGISTERED PROFESSIONAL ENGINEER OLGA ANGELICA RODRIGUEZ No. C53594 EXP. 06-30-17 CIVIL STATE OF CALIFORNIA

CAUTION: THIS PLAN MAY BE REDUCED 0 1" 2" ORIGINAL SCALE

PROJECT NO. A10081001

REFERENCES:

HORIZONTAL: NAD83(2011)
VERTICAL: NAVD88
PLANFILE 272-26

CAUTION:
CHECK TRACING FOR LATEST REVISIONS

| NO. | REVISIONS | DATE | REV'D | APP'D |
|---|---|---|---|---|
| | | | | |

DRAWN V. ORTEGA
DESIGNED O. RODRIGUEZ C 52594 REG. ENGINEER NO.
CHECKED M. CANEPA C 48676 REG. ENGINEER NO.

PORT OF OAKLAND
530 WATER ST. OAKLAND, CALIFORNIA

MOTT MACDONALD

OAKLAND INTERNATIONAL AIRPORT

OAK RENTAL CAR CENTER IMPROVEMENTS

CROSS SECTION 2 OF 2

DATE: 01-13-17
SCALE: NO SCALE
SHEET: 26 OF 53 SHEETS

C2 AA-4193

PRINT DATE 01-19-17 14:24:20 C:\pwworking\hmm\water_wastewater\hen68848\d0221851\4193-026.dwg Printed by HEN68848

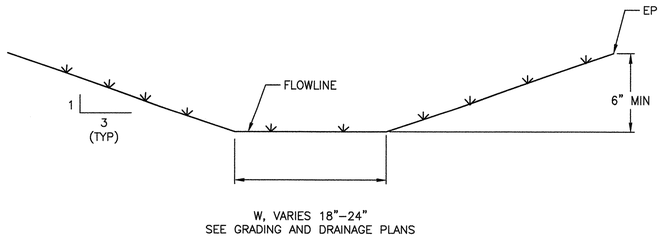


1 GR1 C3 C1 — DRAINAGE SWALE
NTS

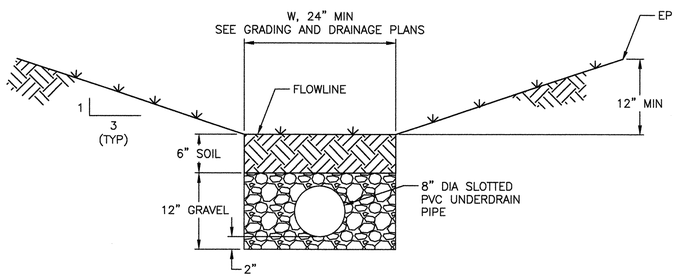


2 GR1 C3 GR2 C2 — VEGETATED SWALE
NTS

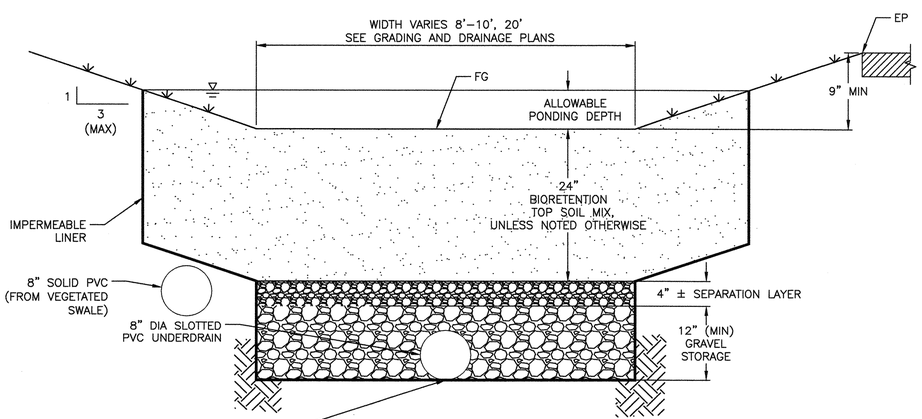


3 GR1 C3 GR2 C1 C2 — BIORETENTION AREA
NTS

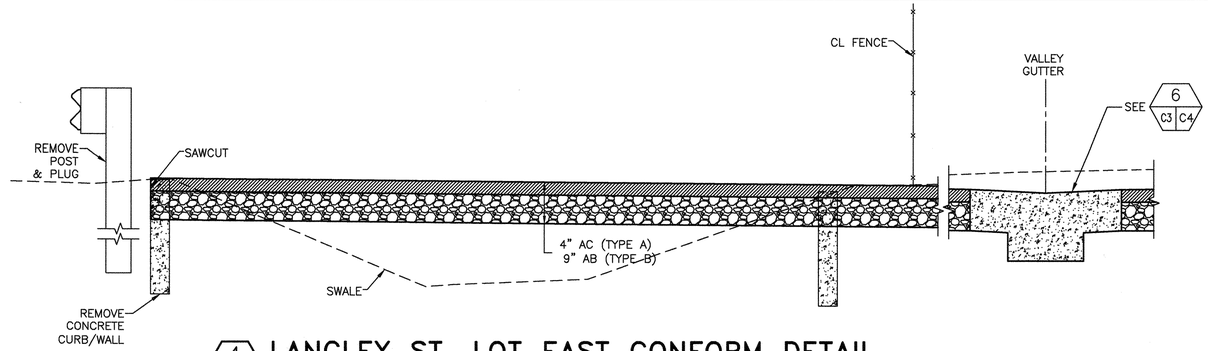


4 C2 C3 — LANGLEY ST. LOT EAST CONFORM DETAIL
NTS

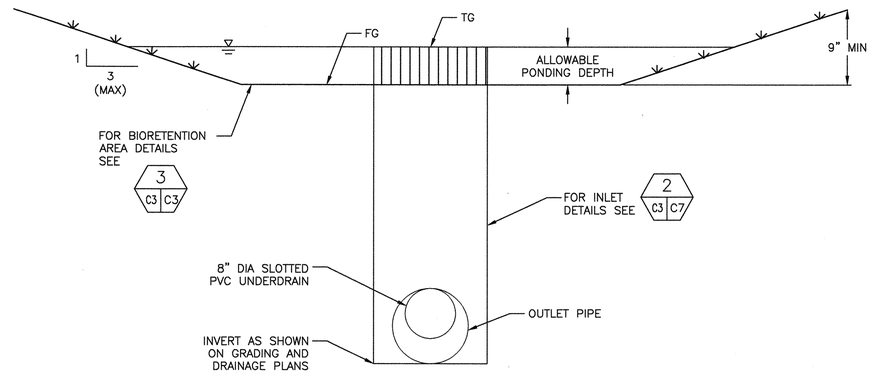


5 GR1 C3 C1 C2 — INLET AT BIORETENTION AREA
NTS

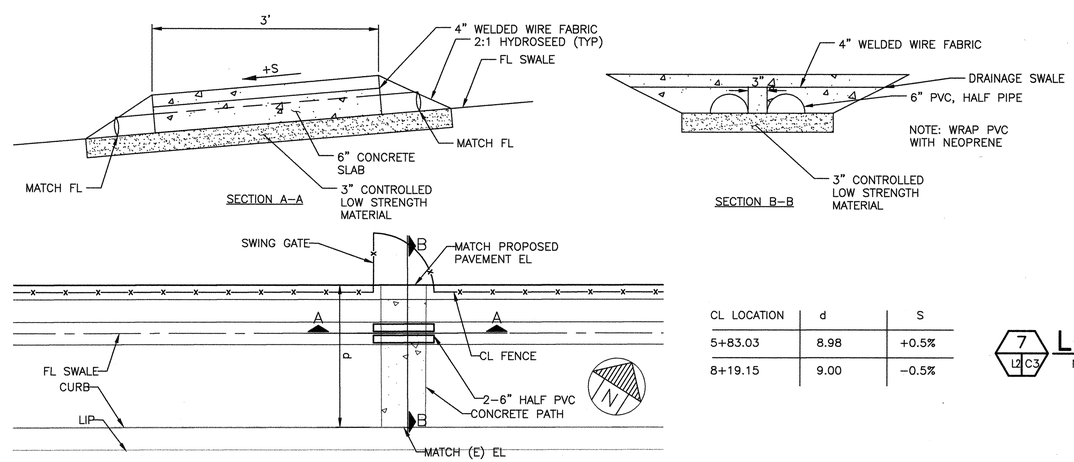


| CL LOCATION | d | S |
|---|---|---|
| 5+83.03 | 8.98 | +0.5% |
| 8+19.15 | 9.00 | −0.5% |

8 L1 C3 — CONCRETE PEDESTRIAN PATH
NTS

CAUTION: THIS PLAN MAY BE REDUCED 0 1" 2" ORIGINAL SCALE

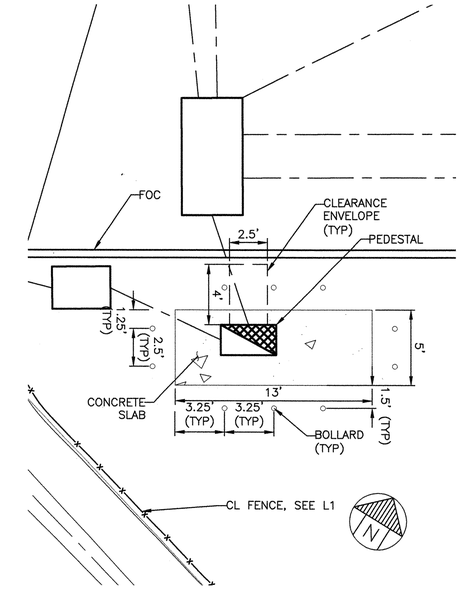


6 L1 C3 — RYAN ST PEDESTAL DETAIL
NTS

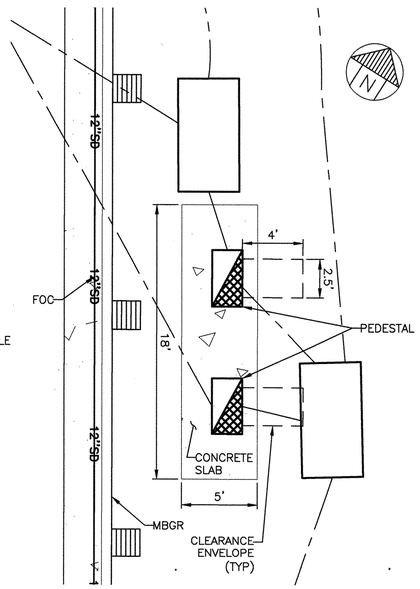


7 L2 C3 — L–825 LOT PEDESTAL DETAIL
NTS

REGISTERED PROFESSIONAL ENGINEER
OLGA MELICH RODRIGUEZ
No. C53594
EXP. 06-30-17
CIVIL
STATE OF CALIFORNIA

PROJECT NO. A10081001

REFERENCES:
HORIZONTAL: NAD83(2011)
VERTICAL: NAVD88
PLANFILE 272–26

CAUTION:
CHECK TRACING FOR LATEST REVISIONS

| NO. | REVISIONS | DATE | REV'D | APP'D |
|---|---|---|---|---|
| | | | | |

DRAWN V. ORTEGA
DESIGNED R. CRAWFORD C 63316 REG. ENGINEER NO.
CHECKED M. CANEPA C 48676 REG. ENGINEER NO.

PORT OF OAKLAND
530 WATER ST. OAKLAND, CALIFORNIA

MOTT MACDONALD

OAKLAND INTERNATIONAL AIRPORT
OAK RENTAL CAR CENTER IMPROVEMENTS
CONSTRUCTION DETAILS 1 OF 3

DATE: 01–13–17
SCALE: 1"=30'
SHEET: 27 OF 53 SHEETS
C3 AA–4193

PRINT DATE 02–02–17 15:53:16 C:\pwworking\hmm\water_wastewater\hen68848\d0221851\4193-027.dwg Printed by HEN68848

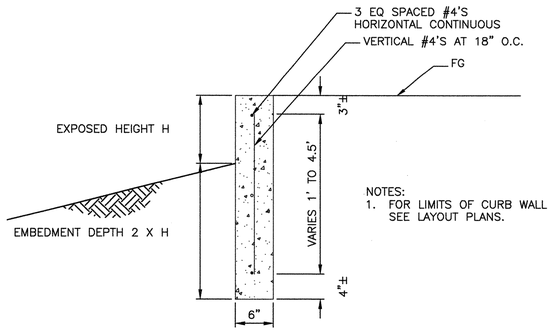


## 1 CURB WALL
L1 C4 L2
NTS

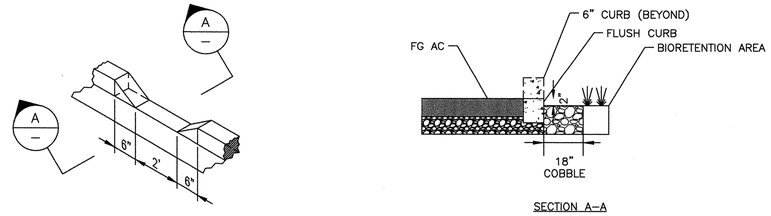


## 2 CURB OPENING DETAIL
L2 C4
NTS

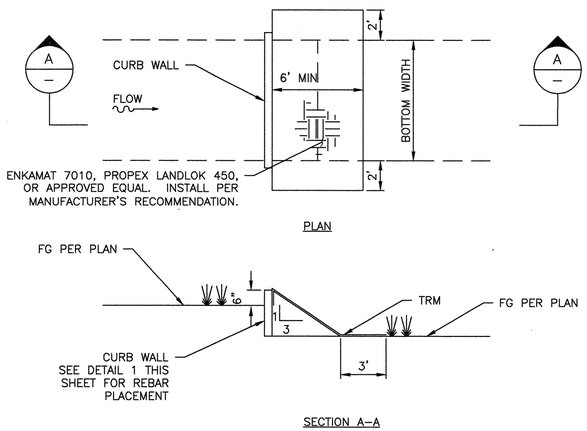


## 4 TURF REINFORCEMENT AT CURB WALL
GR1 C4
NTS

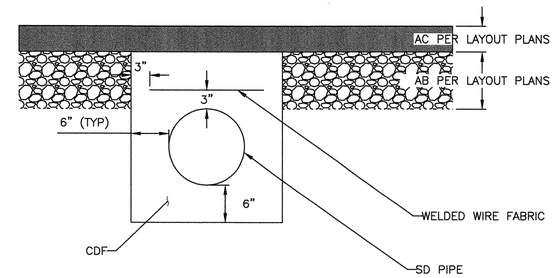


## 5 CONTROLLED DENSITY FILL (CDF) BACKFILL
GR2 C4
NTS

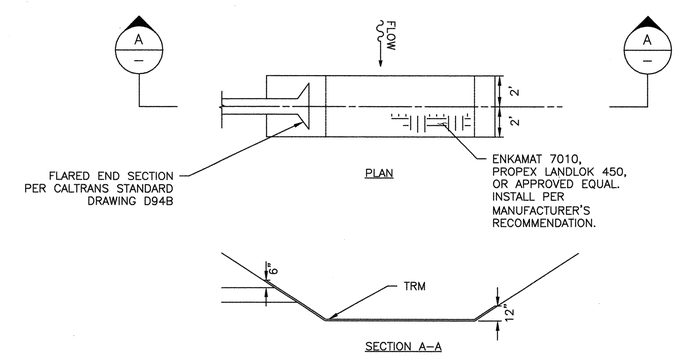


## 8 TURF REINFORCEMENT AT PIPE OUTLET
GR2 C4
NTS

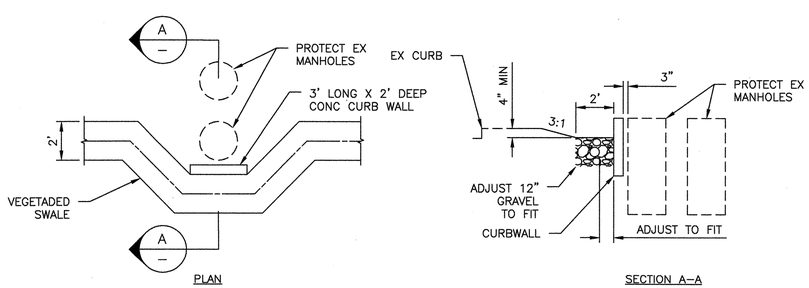


## 7 VEGETATED SWALE AT MANHOLE DETAIL
GR1 C4
NTS

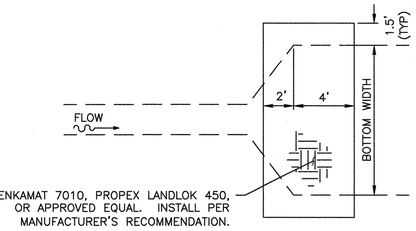


## 3 TRM DETAIL AT VEGETATED SWALE TRANSITION
GR1 C4 GR2
NTS

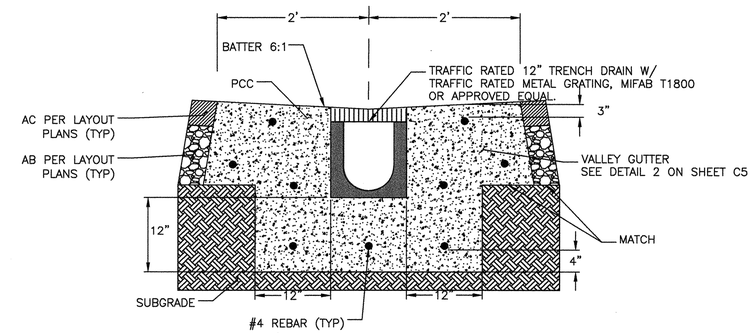


## 6 TRENCH DRAIN
GR2 C4
NTS

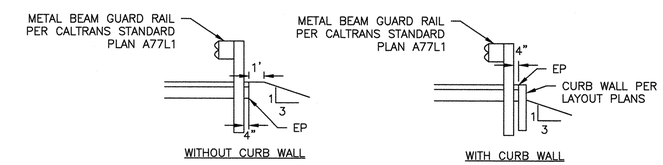


## 9 GUARDRAIL LAYOUT DETAIL
L2 C4
NTS

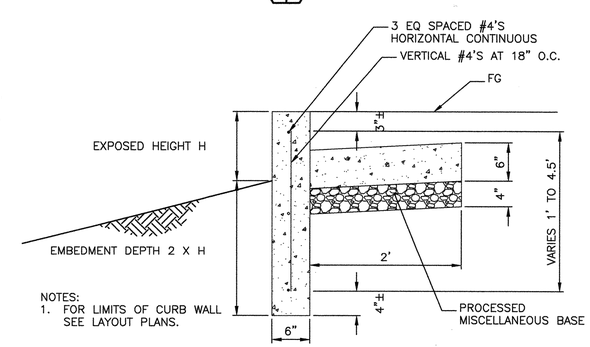


## 10 CURB WALL WITH GUTTER
L2 C4
NTS

CAUTION: THIS PLAN MAY BE REDUCED
0 1" 2"
ORIGINAL SCALE

REGISTERED PROFESSIONAL ENGINEER
OLGA MELICH RODRIGUEZ
No. C53594
EXP. 06-30-17
CIVIL
STATE OF CALIFORNIA

PROJECT NO. A10081001

REFERENCES:
HORIZONTAL: NAD83(2011)
VERTICAL: NAVD88
PLANFILE 272–26

CAUTION:
CHECK TRACING FOR LATEST REVISIONS

| NO. | REVISIONS | DATE | REV'D | APP'D |
|---|---|---|---|---|
| | | | | |

DRAWN A. HENSCHKE
DESIGNED A. HENSCHKE C 81506 REG. ENGINEER NO.
CHECKED M. CANEPA C 48676 REG. ENGINEER NO.

PORT OF OAKLAND
530 WATER ST. OAKLAND, CALIFORNIA

MOTT MACDONALD

OAKLAND INTERNATIONAL AIRPORT
OAK RENTAL CAR CENTER IMPROVEMENTS
CONSTRUCTION DETAILS 2 OF 3

DATE: 01-13-17
SCALE: NO SCALE
SHEET: 28 OF 53 SHEETS
C4 AA-4193

PRINT DATE 01-31-17 11:29:09 C:\pwworking\hmm\water_wastewater\hen68848\d0221851\4193-028.dwg Printed by HEN68848

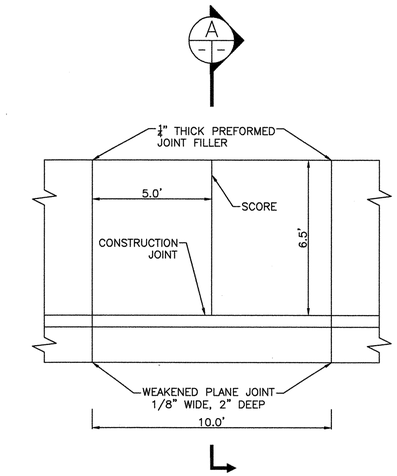


## 1 SIDEWALK
L1 C5 L2 N.T.S.

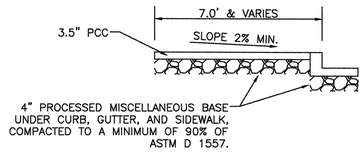


SECTION A–A

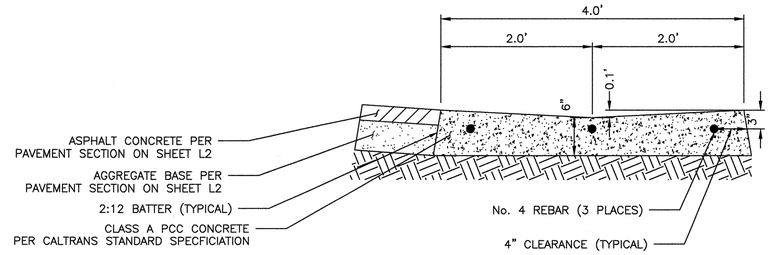


## 2 VALLEY GUTTER
L1 C5 L2 C3 GR2 1"=1'

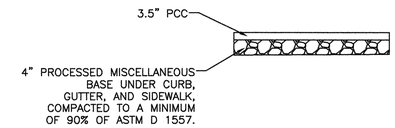


## 3 ISLAND PAVING
L2 C5 N.T.S.

### NOTES:

1. POST AND BRACES SHALL BE SCHEDULE 40 (STANDARD WEIGHT) PIPE. SIZES SPECIFIED ARE OUTSIDE DIAMETER.
2. TOP RAIL COUPLINGS SHALL BE LOCATED WITHIN 6" OF LINE POST.
3. TOP OF CONCRETE FOOTING SHALL BE CROWNED TO SHED WATER.
4. ALL FENCING MATERIAL INCLUDING GATE HARDWARE SHALL BE GALVANIZED STEEL.
5. CURB RAMP SHALL HAVE A DETECTABLE WARNING SURFACE THAT EXTENDS THE FULL WIDTH OF 3' DEPTH OF THE RAMP. DETECTABLE WARNING SURFACES SHALL CONFORM TO THE REQUIREMENTS IN THE CALTRANS STANDARD SPECIFICATIONS.
6. COUNTER SLOPES OF ADJOINING GUTTERS AND ROAD SURFACES IMMEDIATELY ADJACENT TO AND WITHIN 24 INCHES OF THE CURB RAMP SHALL NOT BE STEEPER THAN 1V:20H (5.0%). GUTTER PAN SLOPE SHALL NOT EXCEED 1" OF DEPTH FOR EACH 2' OF WIDTH.

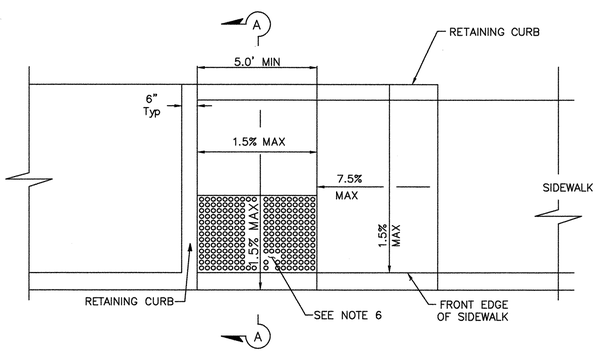


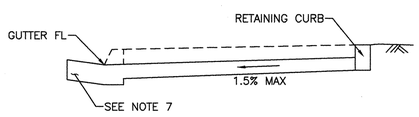


SECTION A–A

## 4 MODIFIED TYPE "C" CURB RAMP
L2 C5 N.T.S.

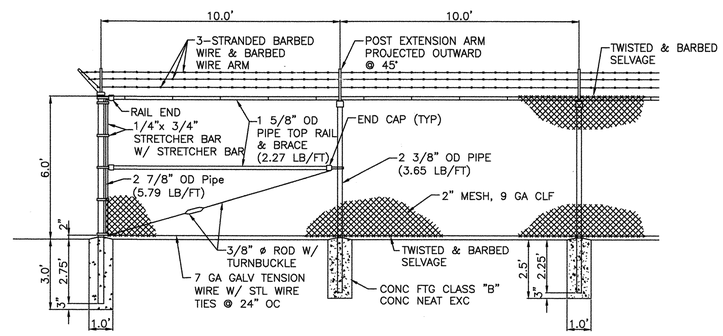


SLOPE, CORNER END, OR PULL POST | FIRST LINE POST | LINE POST

CORNER AND LINE POST DETAIL

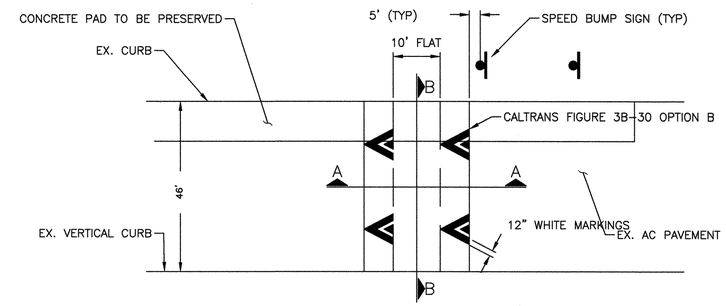


PLAN

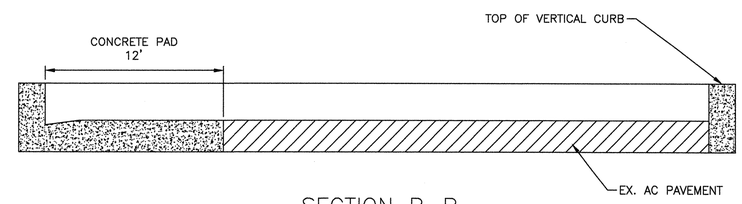


SECTION B–B

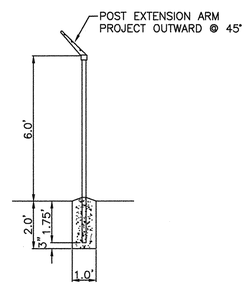


SECTION

CORNER AND LINE POST DETAIL

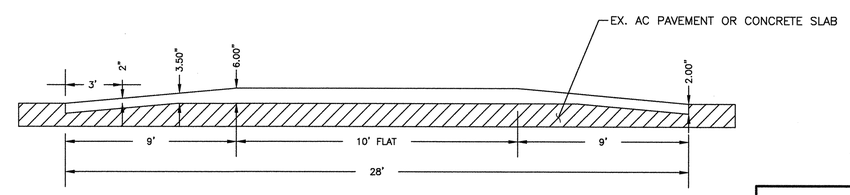


SECTION A–A

## 6 RAISED CROSSWALK
L2 C5 N.T.S.

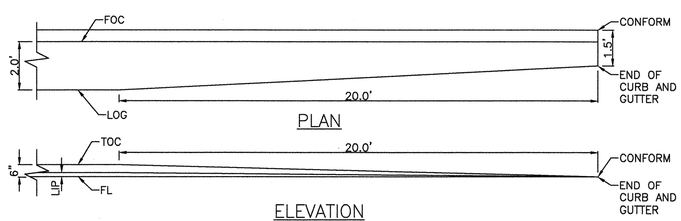


ELEVATION

## 7 CURB TRANSITION DETAIL
L1 C5 N.T.S.

## 5 BARBED WIRE FENCE
L1 C5 N.T.S.

CAUTION: THIS PLAN MAY BE REDUCED 0 1" 2" ORIGINAL SCALE

REGISTERED PROFESSIONAL ENGINEER OLGA MARLION RODRIGUEZ No. C53594 EXP. 06-30-17 CIVIL STATE OF CALIFORNIA

PROJECT NO. A10081001

REFERENCES:
HORIZONTAL: NAD83(2011)
VERTICAL: NAVD88
PLANFILE 272-26

CAUTION:
CHECK TRACING FOR LATEST REVISIONS

| NO. | REVISIONS | DATE | REV'D | APP'D |
|---|---|---|---|---|
| | | | | |

DRAWN A. SHARMA
DESIGNED A. HENSCHKE C 81506 REG. ENGINEER NO.
CHECKED M. CANEPA C 48676 REG. ENGINEER NO.

PORT OF OAKLAND
530 WATER ST. OAKLAND, CALIFORNIA

MOTT MACDONALD

OAKLAND INTERNATIONAL AIRPORT
OAK RENTAL CAR CENTER IMPROVEMENTS
CONSTRUCTION DETAILS 3 OF 3

DATE: 01-13-17
SCALE: NO SCALE
SHEET: 29 OF 53 SHEETS
C5 AA-4193

PRINT DATE 02-03-17 12:30:44 C:\pwworking\hmm\water_wastewater\hen68848\d0221851\4193-023.dwg Printed by HEN68848

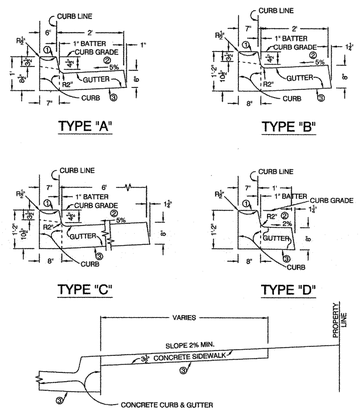


NOTES

1. OMIT THIS PORTION OF CURB AT DRIVEWAYS.
2. STANDARD SLOPE EXCEPT AS SHOWN ON PLANS.
3. PLACE 4" OF PROCESSED MISCELLANEOUS BASE UNDER CURB, GUTTER AND SIDEWALK UNLESS OTHERWISE DIRECTED BY THE ENGINEER.

NOTE: THIS PLAN IS NOT A LEGAL ENGINEERING DOCUMENT BUT AN ELECTRONIC DUPLICATE. THE SIGNED CITY OF OAKLAND STANDARD DETAILS FOR PUBLIC WORKS CONSTRUCTION IS AVAILABLE FOR PURCHASE FROM THE CONTRACT ADMINISTRATION DEPARTMENT.

CITY OF OAKLAND | DESIGN AND CONSTRUCTION SERVICES DEPARTMENT

## CONCRETE CURB AND GUTTER

ENGINEERING DESIGN MANAGER — DATE: JANUARY 2002 — REV. DATE: — DWG. S-1

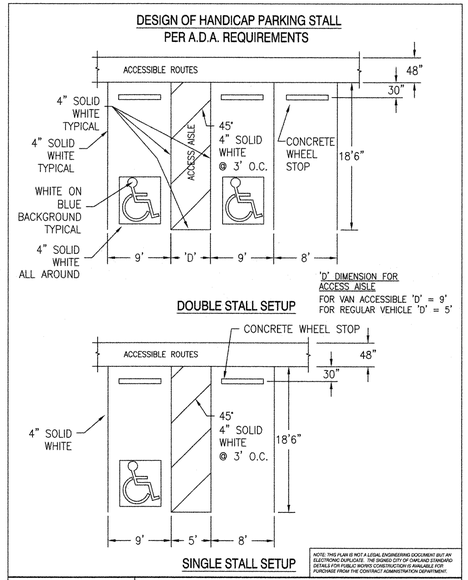


NOTE: THIS PLAN IS NOT A LEGAL ENGINEERING DOCUMENT BUT AN ELECTRONIC DUPLICATE. THE SIGNED CITY OF OAKLAND STANDARD DETAILS FOR PUBLIC WORKS CONSTRUCTION IS AVAILABLE FOR PURCHASE FROM THE CONTRACT ADMINISTRATION DEPARTMENT.

CITY OF OAKLAND | DESIGN AND CONSTRUCTION SERVICES DEPARTMENT

## PARKING STANDARDS

TRANSPORTATION SERVICES MANAGER — DATE: JANUARY 2002 — REV. DATE: — DWG. T-2

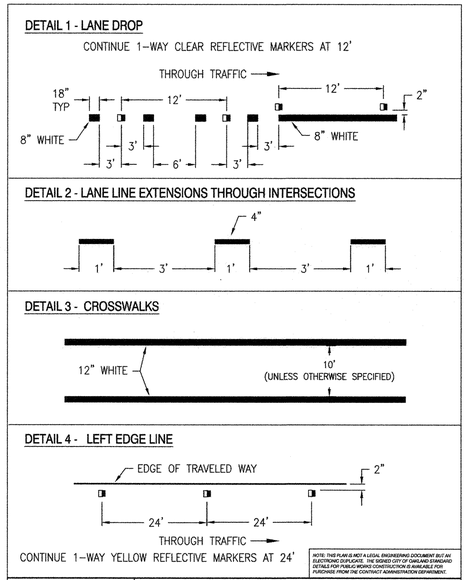


NOTE: THIS PLAN IS NOT A LEGAL ENGINEERING DOCUMENT BUT AN ELECTRONIC DUPLICATE. THE SIGNED CITY OF OAKLAND STANDARD DETAILS FOR PUBLIC WORKS CONSTRUCTION IS AVAILABLE FOR PURCHASE FROM THE CONTRACT ADMINISTRATION DEPARTMENT.

CITY OF OAKLAND | DESIGN AND CONSTRUCTION SERVICES DEPARTMENT

## PAVEMENT MARKING DETAIL

TRANSPORTATION SERVICES MANAGER — DATE: JANUARY 2002 — REV. DATE: — DWG. T-3

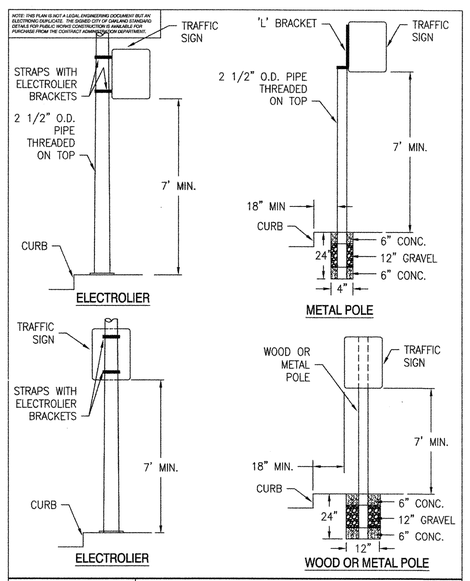


NOTE: THIS PLAN IS NOT A LEGAL ENGINEERING DOCUMENT BUT AN ELECTRONIC DUPLICATE. THE SIGNED CITY OF OAKLAND STANDARD DETAILS FOR PUBLIC WORKS CONSTRUCTION IS AVAILABLE FOR PURCHASE FROM THE CONTRACT ADMINISTRATION DEPARTMENT.

CITY OF OAKLAND | DESIGN AND CONSTRUCTION SERVICES DEPARTMENT

## SIGN INSTALLATION DETAILS

TRANSPORTATION SERVICES MANAGER — DATE: JANUARY 2002 — REV. DATE: — DWG. T-4

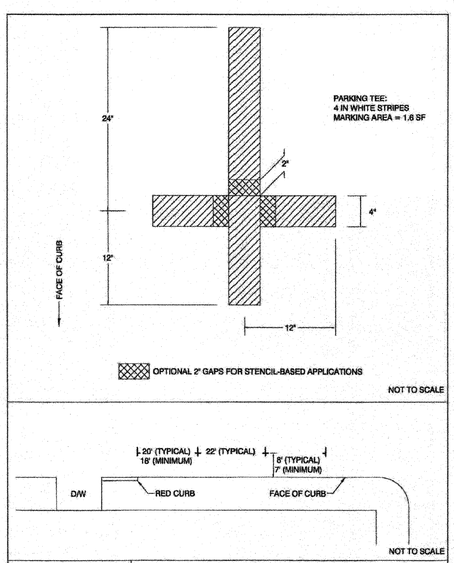


NOTE: THIS PLAN IS NOT A LEGAL ENGINEERING DOCUMENT BUT AN ELECTRONIC DUPLICATE. THE SIGNED CITY OF OAKLAND STANDARD DETAILS FOR PUBLIC WORKS CONSTRUCTION IS AVAILABLE FOR PURCHASE FROM THE CONTRACT ADMINISTRATION DEPARTMENT.

CITY OF OAKLAND | BUREAU OF ENGINEERING AND CONSTRUCTION

## PARKING STALL "TEE"

TRANSPORTATION DIVISION MANAGER — DATE: APR. 2003 — REV. DATE: FEB. 2005 — DWG. T-7

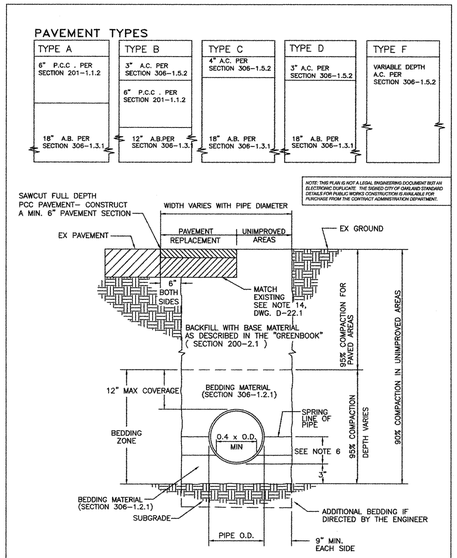


NOTE: THIS PLAN IS NOT A LEGAL ENGINEERING DOCUMENT BUT AN ELECTRONIC DUPLICATE. THE SIGNED CITY OF OAKLAND STANDARD DETAILS FOR PUBLIC WORKS CONSTRUCTION IS AVAILABLE FOR PURCHASE FROM THE CONTRACT ADMINISTRATION DEPARTMENT.

CITY OF OAKLAND | DESIGN AND CONSTRUCTION SERVICES DEPARTMENT

## TRENCH DETAIL

ENGINEERING DESIGN MANAGER — DATE: JANUARY 2002 — REV. DATE: — DWG. D-22.0

REGISTERED PROFESSIONAL ENGINEER — OLGA MARLIOS RODRIGUEZ — No. C53594 — EXP. 06-30-17 — CIVIL — STATE OF CALIFORNIA

PROJECT NO. A10081001

REFERENCES:

HORIZONTAL: NAD83(2011)
VERTICAL: NAVD88
PLANFILE 272-26

CAUTION:
CHECK TRACING FOR LATEST REVISIONS

| NO. | REVISIONS | DATE | REV'D | APP'D |
|---|---|---|---|---|
| | | | | |

DRAWN S. HUYNH
DESIGNED A. HENSCHKE C 81506 REG. ENGINEER NO.
CHECKED M. CANEPA C 48676 REG. ENGINEER NO.

# PORT OF OAKLAND

530 WATER ST. OAKLAND, CALIFORNIA

CAUTION: THIS PLAN MAY BE REDUCED 0 1" 2" ORIGINAL SCALE

MOTT MACDONALD

OAKLAND INTERNATIONAL AIRPORT

OAK RENTAL CAR CENTER IMPROVEMENTS

STANDARD DETAILS 1 OF 2

DATE: 04-13-17
SCALE: NO SCALE
SHEET: 30 OF 53 SHEETS
C6 | AA-4193

PRINT DATE 01-19-17 14:27:02 C:\pwworking\lmm\water_wastewater\hen68848\d0221851\4193-030.dwg Printed by HEN68848

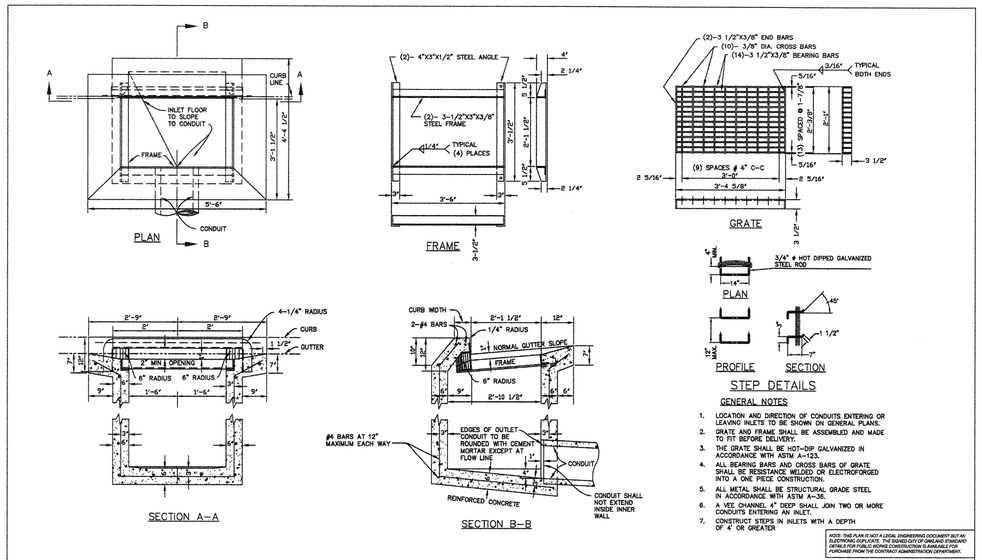


GENERAL NOTES

1. LOCATION AND DIRECTION OF CONDUITS ENTERING OR LEAVING INLETS TO BE SHOWN ON GENERAL PLANS.
2. GRATE AND FRAME SHALL BE ASSEMBLED AND MADE TO FIT BEFORE DELIVERY.
3. THE GRATE SHALL BE HOT–DIP GALVANIZED IN ACCORDANCE WITH ASTM A–123.
4. ALL BEARING BARS AND CROSS BARS OF GRATE SHALL BE RESISTANCE WELDED OR ELECTROFORGED INTO A ONE PIECE CONSTRUCTION.
5. ALL METAL SHALL BE STRUCTURAL GRADE STEEL IN ACCORDANCE WITH ASTM A–36.
6. A VEE CHANNEL 4" DEEP SHALL JOIN TWO OR MORE CONDUITS ENTERING AN INLET.
7. CONSTRUCT STEPS IN INLETS WITH A DEPTH OF 4' OR GREATER

NOTE: THIS PLAN IS NOT A LEGAL ENGINEERING DOCUMENT BUT AN ELECTRONIC DUPLICATE. THE SIGNED CITY OF OAKLAND STANDARD DETAILS FOR PUBLIC WORKS CONSTRUCTION IS AVAILABLE FOR PURCHASE FROM THE CONTRACT ADMINISTRATION DEPARTMENT.

CITY OF OAKLAND | DESIGN AND CONSTRUCTION SERVICES DEPARTMENT

TYPE "B" INLET

ENGINEERING DESIGN MANAGER | DATE: JANUARY 2002 | REV. DATE: | DRAWING D-4

## 1 GR2 C7 TYPE "B" INLET

NTS

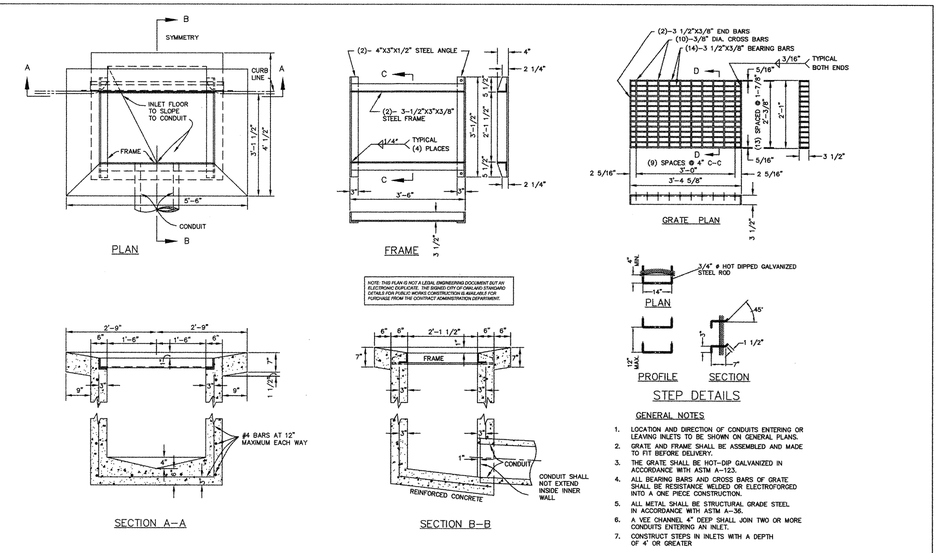


NOTE: THIS PLAN IS NOT A LEGAL ENGINEERING DOCUMENT BUT AN ELECTRONIC DUPLICATE. THE SIGNED CITY OF OAKLAND STANDARD DETAILS FOR PUBLIC WORKS CONSTRUCTION IS AVAILABLE FOR PURCHASE FROM THE CONTRACT ADMINISTRATION DEPARTMENT.

GENERAL NOTES

1. LOCATION AND DIRECTION OF CONDUITS ENTERING OR LEAVING INLETS TO BE SHOWN ON GENERAL PLANS.
2. GRATE AND FRAME SHALL BE ASSEMBLED AND MADE TO FIT BEFORE DELIVERY.
3. THE GRATE SHALL BE HOT–DIP GALVANIZED IN ACCORDANCE WITH ASTM A–123.
4. ALL BEARING BARS AND CROSS BARS OF GRATE SHALL BE RESISTANCE WELDED OR ELECTROFORGED INTO A ONE PIECE CONSTRUCTION.
5. ALL METAL SHALL BE STRUCTURAL GRADE STEEL IN ACCORDANCE WITH ASTM A–36.
6. A VEE CHANNEL 4" DEEP SHALL JOIN TWO OR MORE CONDUITS ENTERING AN INLET.
7. CONSTRUCT STEPS IN INLETS WITH A DEPTH OF 4' OR GREATER

CITY OF OAKLAND | DESIGN AND CONSTRUCTION SERVICES DIVISION

TYPE "D" INLET

ENGINEERING DESIGN MANAGER | DATE: JANUARY 2002 | REV. DATE: | DRAWING D-6

## 2 GR2 C7 TYPE "D" INLET

NTS

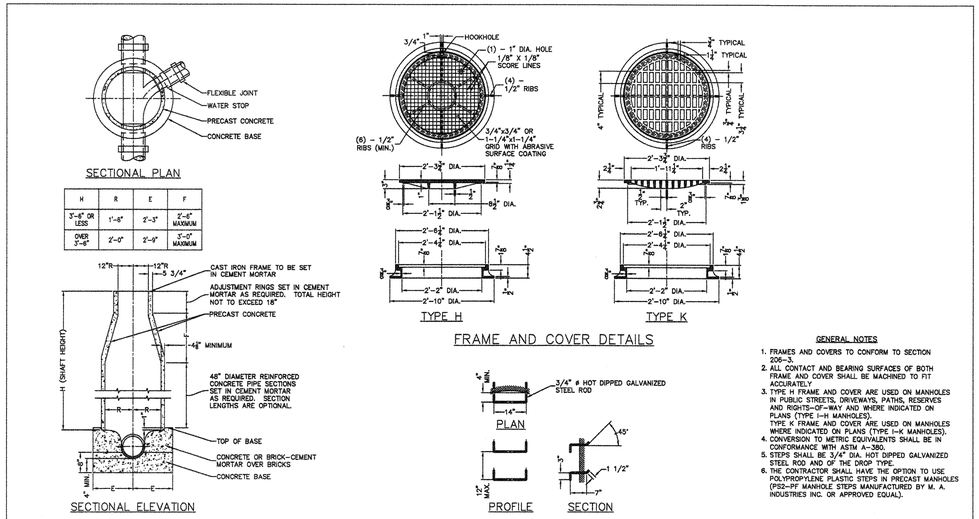


| H | R | E | F |
|---|---|---|---|
| 3'–6" OR LESS | 1'–6" | 2'–3" | 2'–6" MAXIMUM |
| OVER 3'–6" | 2'–0" | 2'–9" | 3'–0" MAXIMUM |

GENERAL NOTES

1. FRAMES AND COVERS TO CONFORM TO SECTION 206–3.
2. ALL CONTACT AND BEARING SURFACES OF BOTH FRAME AND COVER SHALL BE MACHINED TO FIT ACCURATELY.
3. TYPE H FRAME AND COVER ARE USED ON MANHOLES IN PUBLIC STREETS, DRIVEWAYS, PATHS, RESERVES AND RIGHTS–OF–WAY AND WHERE INDICATED ON PLANS (TYPE I–H MANHOLES).
   TYPE K FRAME AND COVER ARE USED ON MANHOLES WHERE INDICATED ON PLANS (TYPE I–K MANHOLES).
4. CONVERSION TO METRIC EQUIVALENTS SHALL BE IN CONFORMANCE WITH ASTM A–380.
5. STEPS SHALL BE 3/4" DIA. HOT DIPPED GALVANIZED STEEL ROD AND OF THE DROP TYPE.
6. THE CONTRACTOR SHALL HAVE THE OPTION TO USE POLYPROPYLENE PLASTIC STEPS IN PRECAST MANHOLES (PS2–PF MANHOLE STEPS MANUFACTURED BY M. A. INDUSTRIES INC. OR APPROVED EQUAL).

NOTE: THIS PLAN IS NOT A LEGAL ENGINEERING DOCUMENT BUT AN ELECTRONIC DUPLICATE. THE SIGNED CITY OF OAKLAND STANDARD DETAILS FOR PUBLIC WORKS CONSTRUCTION IS AVAILABLE FOR PURCHASE FROM THE CONTRACT ADMINISTRATION DEPARTMENT.

CITY OF OAKLAND | DESIGN AND CONSTRUCTION SERVICES DEPARTMENT

MANHOLE TYPE 1

ENGINEERING DESIGN MANAGER | DATE: FEBRUARY 2002 | REV. DATE: | DRAWING D-11

## 3 GR2 C7 MANHOLE TYPE 1

NTS

PROJECT NO. A10081001

REFERENCES:

HORIZONTAL: NAD83(2011)
VERTICAL: NAVD88
PLANFILE 272–26

CAUTION:
CHECK TRACING FOR LATEST REVISIONS

| NO. | REVISIONS | DATE | REV'D | APP'D |
|---|---|---|---|---|
| | | | | |

DRAWN S. HUYNH
DESIGNED A. HENSCHKE C 81506 REG. ENGINEER NO.
CHECKED M. CANEPA C 48676 REG. ENGINEER NO.

CAUTION: THIS PLAN MAY BE REDUCED 0 1" 2" ORIGINAL SCALE

REGISTERED PROFESSIONAL ENGINEER ALEX MELICK RODRIGUEZ No. 053594 EXP. 06-30-17 CIVIL STATE OF CALIFORNIA

PORT OF OAKLAND
530 WATER ST. OAKLAND, CALIFORNIA

MOTT MACDONALD

OAKLAND INTERNATIONAL AIRPORT
OAK RENTAL CAR CENTER IMPROVEMENTS
STANDARD DETAILS 2 OF 2

DATE: 01–13–17
SCALE: NO SCALE
SHEET: 31 OF 53 SHEETS
C7 | AA–4193

PRINT DATE 01-19-17 14:27:31 C:\pwworking\hmm\water_wastewater\hen68848\d0221851\4193-031.dwg Printed by HEN68848

| FIXTURE SCHEDULE | | | | | | |
|---|---|---|---|---|---|---|
| TYPE | LAMPS | VOLTAGE | WATTS PER LUMINAIRE | NUMBER OF LUMINAIRES | DESCRIPTION | MANUFACTURER |
| LA | 3-210LA-641A | 277 | 210 | 4 | GARDCO GULLWING FIXTURE, TYPE III, 4 @ 90 DEGREE DISTRIBUTION WITH NATURAL PAINT, ON 39' POLE WITH FOUR ARMS. POLE SHALL BE ROUND ALUMINUM. FIXTURE SHALL HAVE INTEGRAL PHOTO CELL. | GARDCO LED LUMINAIRE: #GL18-3-210LA-641A-NW<br>GARDCO POLE: #TRA-CB-39H-D4-NP<br>SEE SHEET LT4 FOR POLE BASE |
| LB | 4-210LA-641A | 277 | 210 | 1 | GARDCO GULLWING FIXTURE, TYPE IV, SINGLE DISTRIBUTION WITH NATURAL PAINT, ON 39' POLE WITH ONE ARM. POLE SHALL BE ROUND ALUMINUM. FIXTURE SHALL HAVE INTEGRAL PHOTO CELL. | GARDCO LED LUMINAIRE: #GL18-4-210LA-641A-NW<br>GARDCO POLE: #TRA-CB-39H-D1-NP<br>SEE SHEET LT4 FOR POLE BASE |
| LC | 3-210LA-641A | 277 | 210 | 2 | GARDCO GULLWING FIXTURE, TYPE III, BACK TO BACK DISTRIBUTION WITH NATURAL PAINT, ON 39' POLE WITH TWO ARMS. POLE SHALL BE ROUND ALUMINUM. FIXTURE SHALL HAVE INTEGRAL PHOTO CELL. | GARDCO LED LUMINAIRE: #GL18-3-210LA-641A-NW<br>GARDCO POLE: #TRA-CB-39H-D2-NP<br>SEE SHEET LT4 FOR POLE BASE |
| LD | 4-210LA-641A | 277 | 210 | 1 | GARDCO GULLWING FIXTURE, TYPE IV, SINGLE DISTRIBUTION WITH SHIELD WITH NATURAL PAINT, ON 39' POLE WITH ONE ARM. POLE SHALL BE ROUND ALUMINUM. FIXTURE SHALL HAVE INTEGRAL PHOTO CELL. | GARDCO LED LUMINAIRE: #GL18-4-210LA-641A-NW-HS<br>GARDCO POLE: #TRA-CB-39H-D1-NP<br>SEE SHEET LT4 FOR POLE BASE |

NOTE: THE FOLLOWING LIGHTING PLANS ARE DESIGNED PER THE LIGHTING FIXTURES DESCRIBED ABOVE. THE CONTRACTOR SHALL FURNISH AND INSTALL MATERIALS DESCRIBED ABOVE OR USE PORT APPROVED EQUAL.

## GENERAL NOTES

1. CORE BORING OR OTHER WORK WHICH WILL BE NOISY, DIRTY OR OTHERWISE OBSTRUCT THE WORK PROCESS WILL BE DONE FROM 9:00 AM TO 4:00 PM AS DIRECTED BY THE PORT. POWER TO PORT FACILITIES SHALL BE MAINTAINED AT ALL TIMES UNLESS APPROVED IN WRITING BY THE PORT ENGINEER.
2. THE DRAWINGS AND SPECIFICATIONS ARE NOT INTENDED TO ALLOW VIOLATION OF ELECTRICAL WORKING SPACE AROUND ELECTRICAL EQUIPMENT. A 30"W MIN X 48"D X 6'-6"H SPACE SHALL BE CLEAR TO THE FLOOR IN FRONT OF ALL ELECTRICAL PANELS, CONTROLS, OR ITEMS THAT REQUIRE MAINTENANCE OR ACCESS WHILE ENERGIZED. ANY DEVIATION FROM THIS MINIMUM SHALL BE APPROVED, IN WRITING, BY THE ENGINEER. THE CONTRACTOR SHALL RELOCATE ANY EQUIPMENT IN VIOLATION OF THE ELECTRICAL CODE AT CONTRACTOR'S EXPENSE.
3. COMMISSIONING, PROGRAMMING AND INSTALLATION OF LIGHTING CONTROLS SHALL BE PERFORMED BY ELECTRICAL CONTRACTOR.

## LEGEND

TRANSFORMER

CIRCUIT BREAKER

METER

PEDESTAL

REGISTERED PROFESSIONAL ENGINEER LEOPOLDO TRUJILLO 63950 Exp. 9-30-18 CIVIL STATE OF CALIFORNIA

PROJECT NO. A10081001

CAUTION: THIS PLAN MAY BE REDUCED 0 1" 2" ORIGINAL SCALE

REFERENCES:
HORIZONTAL: NAD83(2011)
VERTICAL: NAVD88
PLANFILE 272-26

CAUTION:
CHECK TRACING FOR LATEST REVISIONS

| NO. | REVISIONS | DATE | REV'D | APP'D |
|---|---|---|---|---|
| | | | | |

DRAWN J. OATES
DESIGNED CELINA LEE C 72233 REG. ENGINEER NO.
CHECKED L. TRUJILLO C 63950 REG. ENGINEER NO.

PORT OF OAKLAND
530 WATER ST. OAKLAND, CALIFORNIA

MOTT MACDONALD

OAKLAND INTERNATIONAL AIRPORT
OAK RENTAL CAR CENTER IMPROVEMENTS
ELECTRICAL GENERAL NOTES, SYMBOLS, AND LIGHTING FIXTURE SCHEDULE

DATE: 01-13-17
SCALE: AS SHOWN
SHEET: 32 OF 53 SHEETS
LT1 AA-4193

PRINT DATE 02-03-17 15:36:28 C:\pwworking\hmm\water_wastewater\tru49263\d0221875\4193-032.dwg Printed by TRU49263

## SINGLE LINE NOTES

1. CONTRACTOR SHALL VERIFY AVAILABLE SHORT CIRCUIT CURRENT WITH THE PORT TO PROPERLY SIZE AIC RATING OF DOWN STREAM PANELS.

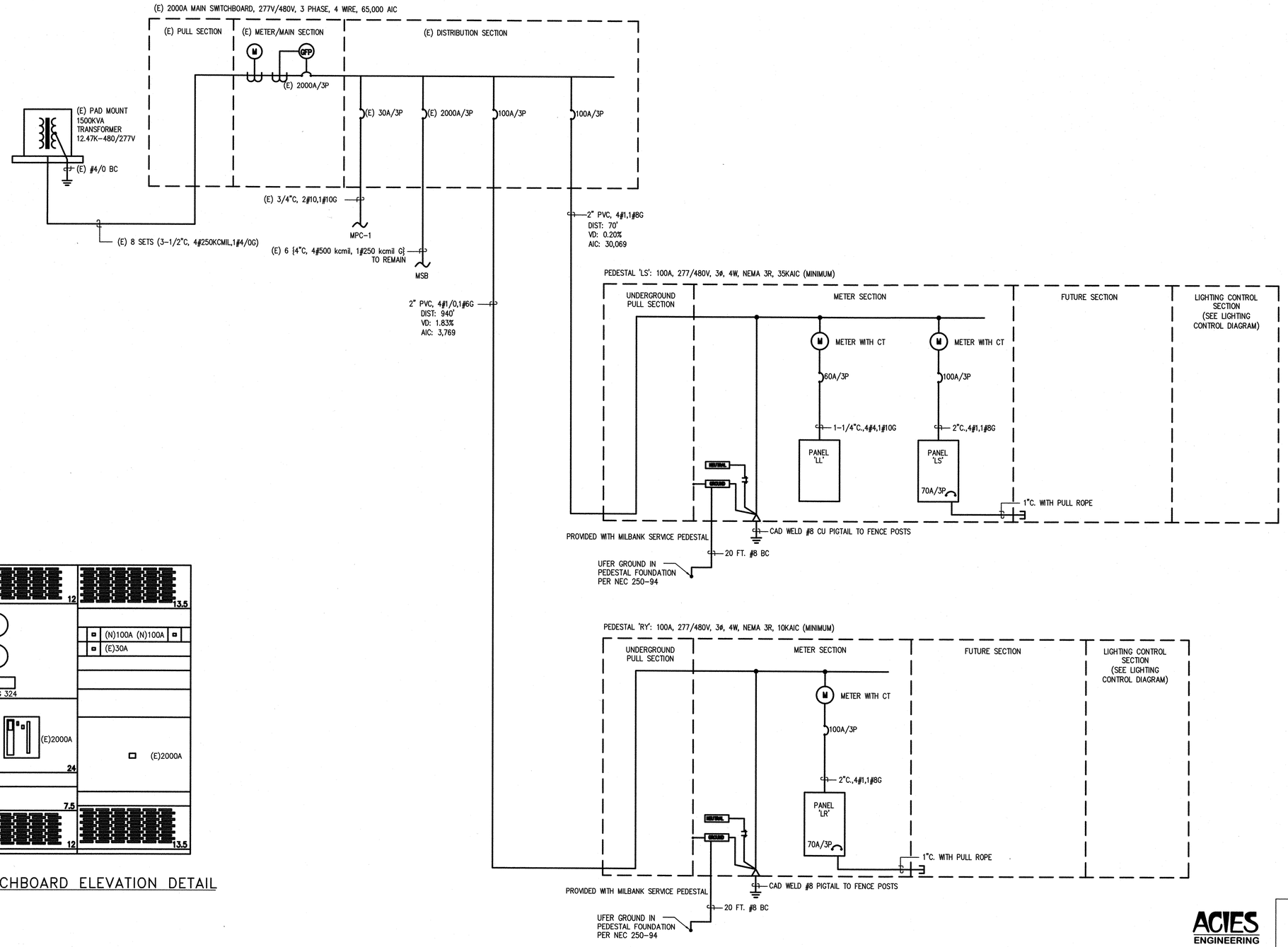


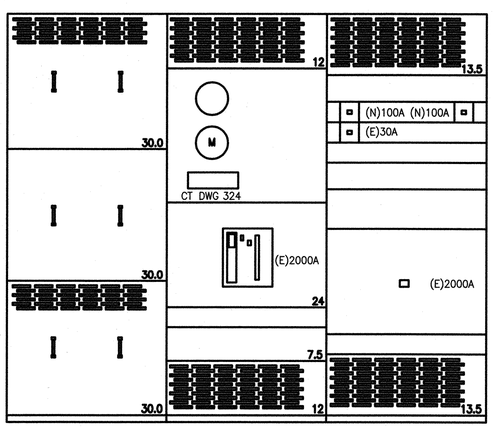


(E) 2000A MAIN SWITCHBOARD ELEVATION DETAIL


ACIES ENGINEERING
3371 Olcott Street
Santa Clara, CA 95054
ph: (408) 522-5255
fx: (408) 522-5280
info@acies.net

Copyright © 2016

REGISTERED PROFESSIONAL ENGINEER CARMEN J. LEE No.E18661 Exp.12/31/18 ELECTRICAL STATE OF CALIFORNIA

CAUTION: THIS PLAN MAY BE REDUCED 0 1" 2" ORIGINAL SCALE

PROJECT NO. A10081001

REFERENCES:
HORIZONTAL: NAD83(2011)
VERTICAL: NAVD88
PLANFILE 272-26

CAUTION:
CHECK TRACING FOR LATEST REVISIONS

| NO. | REVISIONS | DATE | REV'D | APP'D |
|---|---|---|---|---|
| | | | | |

DRAWN CARMEN LEE
DESIGNED CARMEN LEE E 18661 REG. ENGINEER NO.
CHECKED L. TRUJILLO C 63950 REG. ENGINEER NO.

PORT OF OAKLAND
530 WATER ST. OAKLAND, CALIFORNIA

MOTT MACDONALD

OAKLAND INTERNATIONAL AIRPORT
OAK RENTAL CAR CENTER IMPROVEMENTS
SINGLE LINE DIAGRAM

DATE: 01-13-17
SCALE: AS SHOWN
SHEET: 33 OF 53 SHEETS
LT2 AA-4193

PRINT DATE: 02-03-17 16:14:26 C:\pwworking\hmm\water_wastewater\oa149256\d0221875\4193-033.dwg Printed by OAT49256

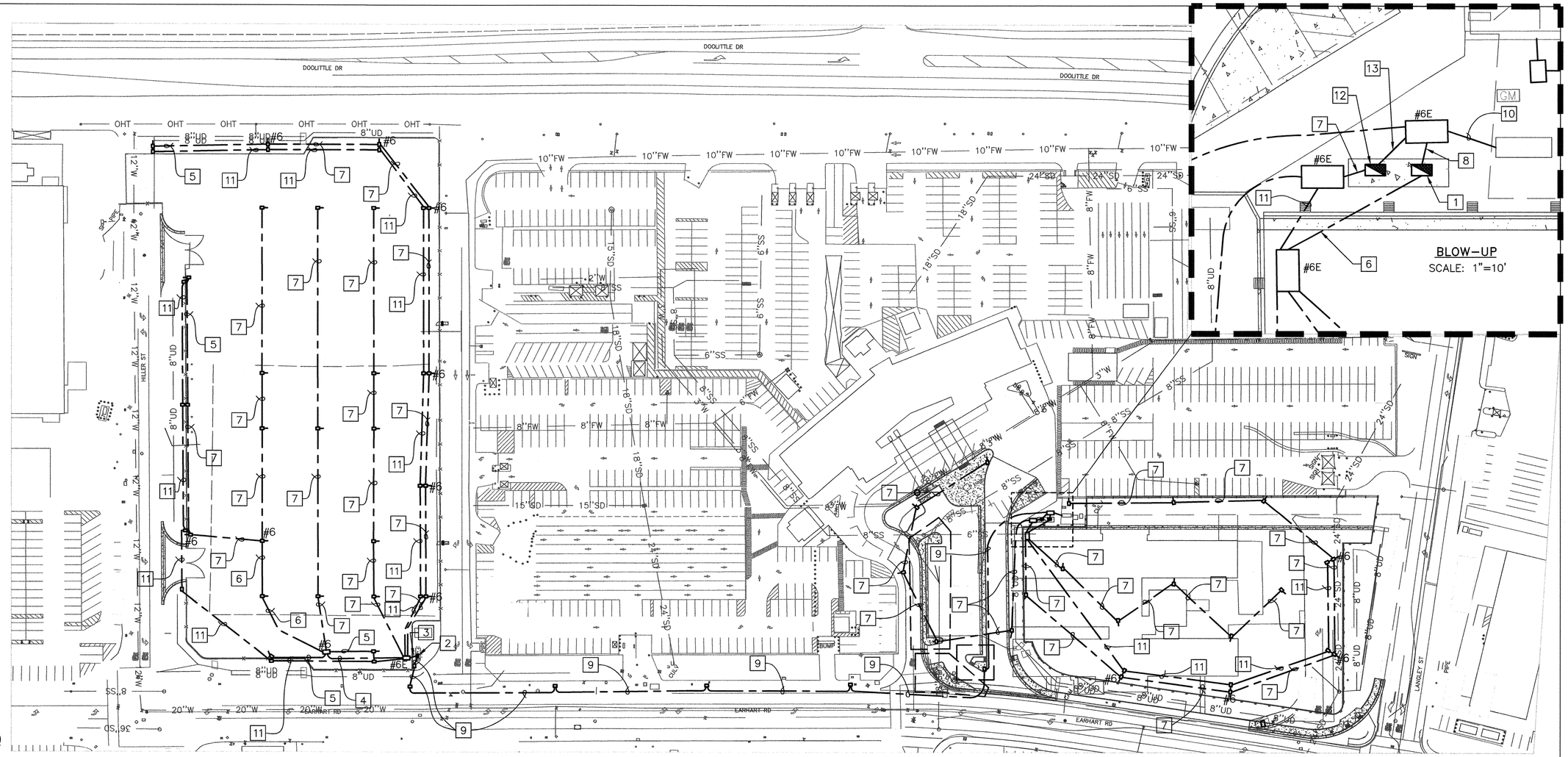


## PROJECT NOTES (THIS SHEET)

1. 100A, 277/480V, 3 PH, 4W, NEMA 3R SERVICE PEDESTAL (SINGLE METER) MILBANK MODEL #CP3BB181CDAP WITH LS LIGHTING CONTROL PANEL MOUNTED TO THE EAST SIDE OF THE SERVICE PEDESTAL AND STUB OUT FOR FUTURE EV PEDESTAL. METER/DOOR SHALL FACE SOUTH.
2. 100A, 277/480V, 3 PH, 4W, NEMA 3R SERVICE PEDESTAL (SINGLE METER) MILBANK MODEL #CP3BB181CDAP WITH LR LIGHTING CONTROL PANEL MOUNTED TO THE SOUTH SIDE OF THE SERVICE PEDESTAL AND STUB OUT FOR FUTURE EV PEDESTAL. METER/DOOR SHALL FACE EAST.
3. (4) 1"C, 3#8, 1#8 GND
4. (3) 1"C, 3#8, 1#8 GND
5. 1"C, 2#8, 1#8 GND
6. (2) 1"C, 3#8, 1#8 GND
7. 1"C, 3#8, 1#8 GND
8. 2"C, 4#1, 1#8 GND
9. 2"C, 4#1/Ø, 1#6 GND
10. 2"C, 4#1, 1#8 GND & 2"C, 4#1/Ø, 1#6 GND
11. (2) 2"C WITH PULL ROPE (FUTURE CCTV AND EV CHARGING STATIONS)
12. 100A, 277/480V, 3 PH, 4W, NEMA 3R SERVICE PEDESTAL (SINGLE METER) MILBANK MODEL #CP3BB181CDAP WITH LL LIGHTING CONTROL PANEL MOUNTED TO THE WEST SIDE OF THE SERVICE PEDESTAL. METER/DOOR SHALL FACE SOUTH.
13. 1-1/4"C, 4#4, 1#10 GND

## GENERAL CONSTRUCTION NOTES

1. ALL PULL BOXES ARE NO. 5 EXCEPT AS OTHERWISE NOTED ON PLANS.
2. PULL BOXES SHALL HAVE A MAXIMUM SPACING OF 200'.
3. ALL PULL BOXES WITH 4 OR MORE CONDUITS SHALL BE NO. 6 EXCEPT AS OTHERWISE NOTED ON PLANS.
4. ALL NEW CONDUITS SHALL BE SCHEDULE 80 PVC.

60' 0 60' 120'
SCALE: 1" = 60'-0"

CAUTION: THIS PLAN MAY BE REDUCED 0 1" 2" ORIGINAL SCALE

REGISTERED PROFESSIONAL ENGINEER LEOPOLDO TRUJILLO 63950 Exp. 9-30-18 CIVIL STATE OF CALIFORNIA

PROJECT NO. A10081001

REFERENCES:
HORIZONTAL: NAD83(2011)
VERTICAL: NAVD88
PLANFILE 272-26

CAUTION:
CHECK TRACING FOR LATEST REVISIONS

| NO. | REVISIONS | DATE | REV'D | APP'D |
|---|---|---|---|---|
| | | | | |

DRAWN J. OATES
DESIGNED CELINA LEE C 72233 REG. ENGINEER NO.
CHECKED L. TRUJILLO C 63950 REG. ENGINEER NO.

PORT OF OAKLAND
530 WATER ST. OAKLAND, CALIFORNIA

MOTT MACDONALD

OAKLAND INTERNATIONAL AIRPORT
OAK RENTAL CAR CENTER IMPROVEMENTS
ELECTRICAL SITE POWER PLAN

DATE: 01-13-17
SCALE: AS SHOWN
SHEET: 34 OF 53 SHEETS
LT3 AA-4193

PRINT DATE 02-03-17 15:18:22 C:\pwworking\hmm\water_wastewater\tru49263\d0221875\4193-034.dwg Printed by TRU49263

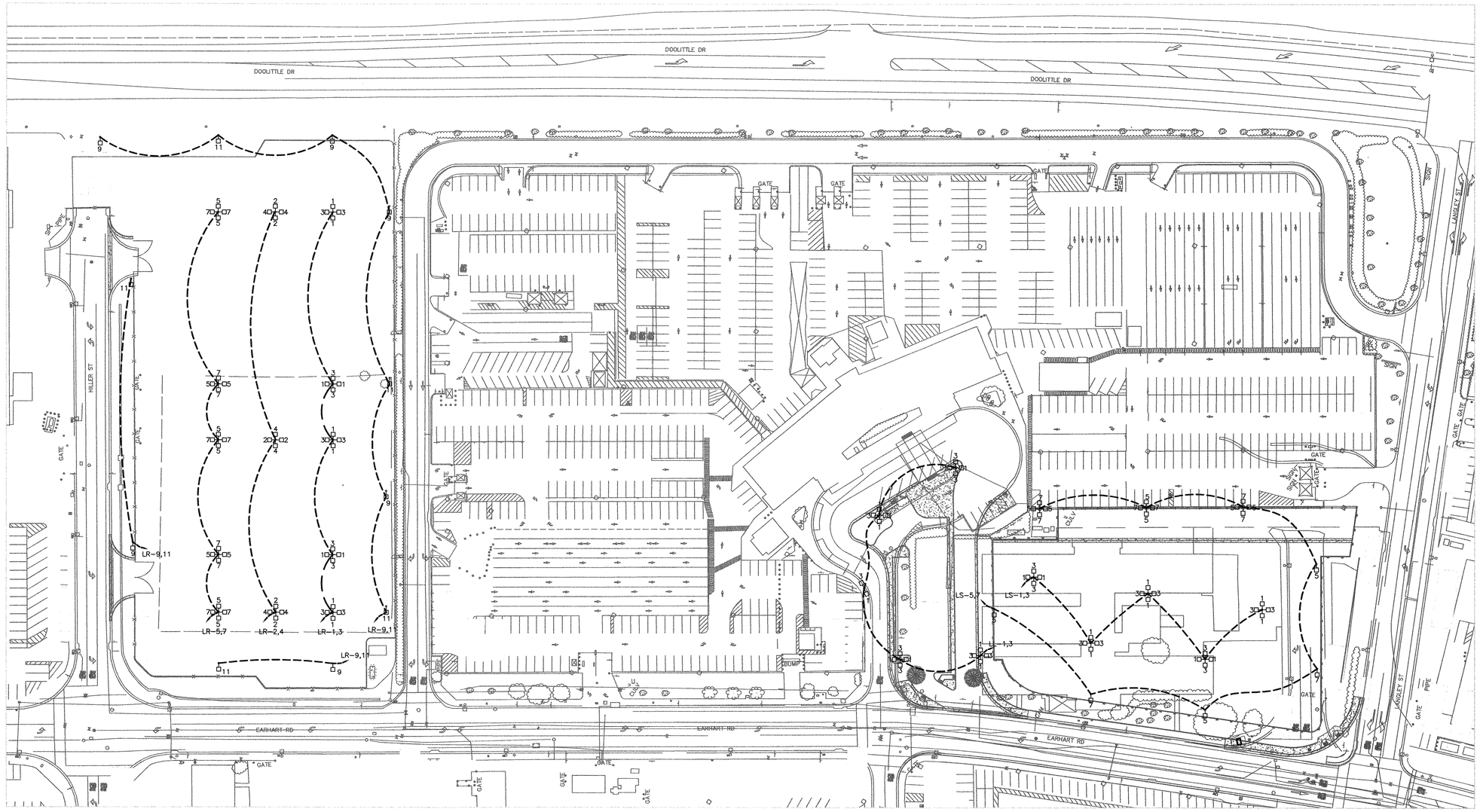


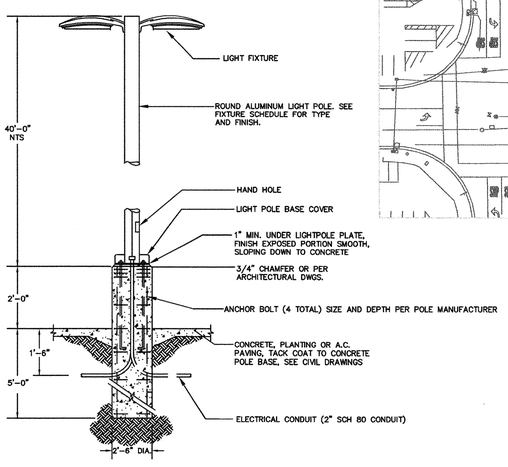


## POLE BASE DETAIL

1. FOR FOUNDATION REINFORCEMENT, REFER TO CALTRANS STANDARD PLAN ES-7N. INSPECTION TUBE NOT NECESSARY.
2. SEE DETAIL "A" FOR GROUNDING

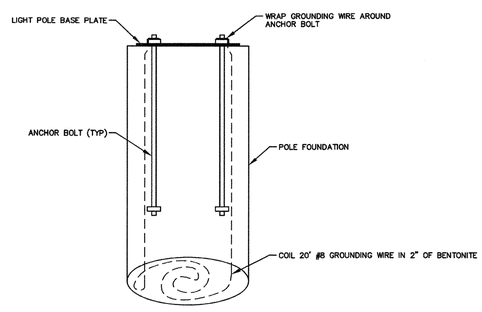


## GROUNDING DETAIL "A"

N

60' 0 60' 120'
SCALE: 1" = 60'-0"

CAUTION: THIS PLAN MAY BE REDUCED 0 1" 2" ORIGINAL SCALE

REGISTERED PROFESSIONAL ENGINEER LEOPOLDO TRUJILLO 63950 Exp. 9-30-18 CIVIL STATE OF CALIFORNIA

PROJECT NO. A10081001

REFERENCES:
HORIZONTAL: NAD83(2011)
VERTICAL: NAVD88
PLANFILE 272-26

CAUTION:
CHECK TRACING FOR LATEST REVISIONS

| NO. | REVISIONS | DATE | REV'D | APP'D |
|---|---|---|---|---|
| | | | | |

DRAWN J. OATES
DESIGNED CELINA LEE C 72233 REG. ENGINEER NO.
CHECKED L. TRUJILLO C 63950 REG. ENGINEER NO.

PORT OF OAKLAND
530 WATER ST. OAKLAND, CALIFORNIA

MOTT MACDONALD

OAKLAND INTERNATIONAL AIRPORT
OAK RENTAL CAR CENTER IMPROVEMENTS
ELECTRICAL SITE LIGHTING PLAN

DATE: 01-13-17
SCALE: AS SHOWN
SHEET: 35 OF 53 SHEETS
LT4 AA-4193

PRINT DATE 02-03-17 15:48:49 C:\pwworking\hmm\water_wastewater\tru49263\d0221875\4193-035.dwg Printed by TRU49263

## PANEL 'LR'

VOLTAGE: 277/480 | WIRE: 4 | MOUNTING: SURFACE | NOTES:
BUS RATING: 100A | PHASE: 3 | AIC RATING: 10,000 | NEMA 3R
MAIN REQUIREMENT: MLO | TYPE: NF | CONDITION: NEW | TVSS

| CKT# | NOTES | LOAD | CB P | CB T | LOAD DESCRIPTION | LOAD KVA | PHASE | LOAD KVA | LOAD DESCRIPTION | CB P | CB T | LOAD | NOTES | CKT# |
|---|---|---|---|---|---|---|---|---|---|---|---|---|---|---|
| 1 | | C | 1 | 20 | LTG - PARKING LOT 50% PKC 1 | 2.10 | A | 1.26 | LTG - PARKING LOT 50% PKC 1 | 1 | 20 | C | | 2 |
| 3 | | C | 1 | 20 | LTG - PARKING LOT 100% PKC 2 | 2.10 | B | 1.26 | LTG - PARKING LOT 100% PKC 2 | 1 | 20 | C | | 4 |
| 5 | | C | 1 | 20 | LTG - PARKING LOT 100% PKC 1 | 2.10 | C | | SPARE | 1 | 20 | | | 6 |
| 7 | | C | 1 | 20 | LTG - PARKING LOT 100% PKC 2 | 2.10 | A | | SPACE | 1 | | | | 8 |
| 9 | | C | 1 | 20 | LTG - PARKING PERIMETER 50% PKC 1 | 1.26 | B | | SPACE | 1 | | | | 10 |
| 11 | | C | 1 | 20 | LTG - PARKING PERIMETER 100% PKC 2 | 1.26 | C | | SPACE | 1 | | | | 12 |
| 13 | | | 1 | | SPACE | | A | | SPACE | 1 | | | | 14 |
| 15 | | | 1 | | SPACE | | B | | SPACE | 1 | | | | 16 |
| 17 | | | 1 | | SPACE | | C | | SPACE | 1 | | | | 18 |
| 19 | | D | - | | ----- | | A | | SPACE | 1 | | | | 20 |
| 21 | | D | 3 | 70 | FUTURE 45KVA TRANSFORMER LQR | | B | | SPACE | 1 | | | | 22 |
| 23 | | D | - | | ----- | | C | 0.20 | LIGHTING CONTROL PANEL | 1 | 20 | G | | 24 |

CONNECTED LOAD:

| | | |
|---|---|---|
| PHASE A | 5.46 | KVA |
| PHASE B | 4.62 | KVA |
| PHASE C | 3.56 | KVA |
| TOTAL | 13.64 | KVA |

NOTE:

DEMAND LOAD CALCULATION

| DEMAND LOAD | SUBTOTAL | NEC DEMAND FACTOR | |
|---|---|---|---|
| CONTINUOUS LOAD (C) | 13.44 | 125% | 16.80 |
| DEDICATED LOAD (D) | 0.00 | 100% | 0.00 |
| GENERAL RECEPTACLE (G) | 0.20 | 100% of 1st 10kVA & 50% of remaining | 0.20 |
| KITCHEN EQUIPMENT (K) | 0.00 | 65% | 0.00 |
| LARGEST MOTOR LOAD (M) | 0.00 | 125% of largest motor load + 100% remaining | 0.00 |
| | | TOTAL DEMAND KVA | 17.00 |
| | | AMPS @ 277/480, 3 PHASE, 4WIRE: | 20.45 |

## PANEL 'LS'

VOLTAGE: 277/480 | WIRE: 4 | MOUNTING: SURFACE | NOTES:
BUS RATING: 100A | PHASE: 3 | AIC RATING: 35,000 | NEMA 3R
MAIN REQUIREMENT: MLO | TYPE: NF | CONDITION: NEW | TVSS

| CKT# | NOTES | LOAD | CB P | CB T | LOAD DESCRIPTION | LOAD KVA | PHASE | LOAD KVA | LOAD DESCRIPTION | CB P | CB T | LOAD | NOTES | CKT# |
|---|---|---|---|---|---|---|---|---|---|---|---|---|---|---|
| 1 | | C | 1 | 20 | LTG - PARKING LOT 50% PKC 1 | 2.10 | A | | SPACE | 1 | | | | 2 |
| 3 | | C | 1 | 20 | LTG - PARKING LOT 100% PKC 2 | 2.10 | B | | SPACE | 1 | | | | 4 |
| 5 | | C | 1 | 20 | LTG - PARKING PERIMETER 100% PKC 1 | 1.89 | C | | SPACE | 1 | | | | 6 |
| 7 | | C | 1 | 20 | LTG - PARKING PERIMETER 100% PKC 2 | 1.68 | A | | SPACE | 1 | | | | 8 |
| 9 | | | 1 | | SPACE | | B | | SPACE | 1 | | | | 10 |
| 11 | | | 1 | | SPACE | | C | | SPACE | 1 | | | | 12 |
| 13 | | | 1 | | SPACE | | A | | SPACE | 1 | | | | 14 |
| 15 | | | 1 | | SPACE | | B | | SPACE | 1 | | | | 16 |
| 17 | | | 1 | | SPACE | | C | | SPACE | 1 | | | | 18 |
| 19 | | D | - | | ----- | | A | | SPACE | 1 | | | | 20 |
| 21 | | D | 3 | 70 | FUTURE 45 KVA TRANSFORMER LQS | | B | | SPACE | 1 | | | | 22 |
| 23 | | D | - | | ----- | | C | 0.20 | LIGHTING CONTROL PANEL | 1 | 20 | G | | 24 |

CONNECTED LOAD:

| | | |
|---|---|---|
| PHASE A | 3.78 | KVA |
| PHASE B | 2.10 | KVA |
| PHASE C | 2.09 | KVA |
| TOTAL | 7.97 | KVA |

NOTE:

DEMAND LOAD CALCULATION

| DEMAND LOAD | SUBTOTAL | NEC DEMAND FACTOR | |
|---|---|---|---|
| CONTINUOUS LOAD (C) | 7.77 | 125% | 9.71 |
| DEDICATED LOAD (D) | 0.00 | 100% | 0.00 |
| GENERAL RECEPTACLE (G) | 0.20 | 100% of 1st 10kVA & 50% of remaining | 0.20 |
| KITCHEN EQUIPMENT (K) | 0.00 | 65% | 0.00 |
| LARGEST MOTOR LOAD (M) | 0.00 | 125% of largest motor load + 100% remaining | 0.00 |
| | | TOTAL DEMAND KVA | 9.91 |
| | | AMPS @ 277/480, 3 PHASE, 4WIRE: | 11.92 |

## PANEL 'LL'

VOLTAGE: 277/480 | WIRE: 4 | MOUNTING: SURFACE | NOTES:
BUS RATING: 100A | PHASE: 3 | AIC RATING: 35,000 | NEMA 3R
MAIN REQUIREMENT: MLO | TYPE: NF | CONDITION: NEW | TVSS

| CKT# | NOTES | LOAD | CB P | CB T | LOAD DESCRIPTION | LOAD KVA | PHASE | LOAD KVA | LOAD DESCRIPTION | CB P | CB T | LOAD | NOTES | CKT# |
|---|---|---|---|---|---|---|---|---|---|---|---|---|---|---|
| 1 | | C | 1 | 20 | LTG - DRIVEWAY 50% DR 1 | 1.89 | A | | SPACE | 1 | | | | 2 |
| 3 | | C | 1 | 20 | LTG - DRIVEWAY 100% DR 2 | 1.89 | B | | SPACE | 1 | | | | 4 |
| 5 | | | 1 | 20 | SPARE | | C | | SPACE | 1 | | | | 6 |
| 7 | | | 1 | | SPACE | | A | | SPACE | 1 | | | | 8 |
| 9 | | | 1 | | SPACE | | B | | SPACE | 1 | | | | 10 |
| 11 | | | 1 | | SPACE | | C | | SPACE | 1 | | | | 12 |
| 13 | | | 1 | | SPACE | | A | | SPACE | 1 | | | | 14 |
| 15 | | | 1 | | SPACE | | B | | SPACE | 1 | | | | 16 |
| 17 | | | 1 | | SPACE | | C | | SPACE | 1 | | | | 18 |
| 19 | | | 1 | | SPACE | | A | | SPACE | 1 | | | | 20 |
| 21 | | | 1 | | SPACE | | B | | SPACE | 1 | | | | 22 |
| 23 | | | 1 | | SPACE | | C | 0.20 | LIGHTING CONTROL PANEL | 1 | 20 | G | | 24 |

CONNECTED LOAD:

| | | |
|---|---|---|
| PHASE A | 1.89 | KVA |
| PHASE B | 1.89 | KVA |
| PHASE C | 0.20 | KVA |
| TOTAL | 3.98 | KVA |

NOTE:

DEMAND LOAD CALCULATION

| DEMAND LOAD | SUBTOTAL | NEC DEMAND FACTOR | |
|---|---|---|---|
| CONTINUOUS LOAD (C) | 3.78 | 125% | 4.73 |
| DEDICATED LOAD (D) | 0.00 | 100% | 0.00 |
| GENERAL RECEPTACLE (G) | 0.20 | 100% of 1st 10kVA & 50% of remaining | 0.20 |
| KITCHEN EQUIPMENT (K) | 0.00 | 65% | 0.00 |
| LARGEST MOTOR LOAD (M) | 0.00 | 125% of largest motor load + 100% remaining | 0.00 |
| | | TOTAL DEMAND KVA | 4.93 |
| | | AMPS @ 277/480, 3 PHASE, 4WIRE: | 5.92 |

## LIGHTING CONTROL PANEL SCHEDULE

LCP NAME: LCP-LR
LOCATION: RYAN LOT
SURFACE/FLUSH: SURFACE, NEMA 3R ENCLOSURE
POWER CIRCUIT: LR-24

| RELAY # | CIRCUIT | DESCRIPTION | LV SWITCH/SENSOR | CHANNEL |
|---|---|---|---|---|
| 1 | LR-1,2 | PARKING LOT | PHOTOCELL/ASTRONOMICAL | A |
| 2 | LR-3,4 | PARKING LOT | PHOTOCELL/ASTRONOMICAL | B |
| 3 | LR-5 | PARKING LOT | PHOTOCELL/ASTRONOMICAL | C |
| 4 | LR-7 | PARKING LOT | PHOTOCELL/ASTRONOMICAL | D |
| 5 | LR-9 | PERIMETER | PHOTOCELL/ASTRONOMICAL | E |
| 6 | LR-11 | PERIMETER | PHOTOCELL/ASTRONOMICAL | F |
| 7 | | SPARE | | G |
| 8 | | SPARE | | H |

## LIGHTING CONTROL PANEL SCHEDULE

LCP NAME: LCP-LS
LOCATION: SOUTH LOT
SURFACE/FLUSH: SURFACE, NEMA 3R ENCLOSURE
POWER CIRCUIT: LS-24

| RELAY # | CIRCUIT | DESCRIPTION | LV SWITCH/SENSOR | CHANNEL |
|---|---|---|---|---|
| 1 | LS-1 | PARKING LOT | PHOTOCELL/ASTRONOMICAL | A |
| 2 | LS-3 | PARKING LOT | PHOTOCELL/ASTRONOMICAL | B |
| 3 | LS-5 | PERIMETER | PHOTOCELL/ASTRONOMICAL | C |
| 4 | LS-7 | PERIMETER | PHOTOCELL/ASTRONOMICAL | D |
| 5 | | SPARE | | E |
| 6 | | SPARE | | F |
| 7 | | SPARE | | G |
| 8 | | SPARE | | H |

## LIGHTING CONTROL PANEL SCHEDULE

LCP NAME: LCP-LL
LOCATION: BUS LOOP
SURFACE/FLUSH: SURFACE, NEMA 3R ENCLOSURE
POWER CIRCUIT: LL-24

| RELAY # | CIRCUIT | DESCRIPTION | LV SWITCH/SENSOR | CHANNEL |
|---|---|---|---|---|
| 1 | LL-1 | BUS LOOP | PHOTOCELL/ASTRONOMICAL | A |
| 2 | LL-3 | BUS LOOP | PHOTOCELL/ASTRONOMICAL | B |
| 3 | | SPARE | | C |
| 4 | | SPARE | | D |
| 5 | | SPARE | | E |
| 6 | | SPARE | | F |
| 7 | | SPARE | | G |
| 8 | | SPARE | | H |

## SEQUENCE OF OPERATION

A. EXTERIOR LIGHTING
1. EXTERIOR LIGHTS: PHOTOCELL ON – TIME SWITCH OFF
2. EXTERIOR NIGHT LIGHTS: PHOTOCELL ON AND OFF

ELECTRICAL PANEL REQUIREMENTS:
PROVIDE A SINGLE RELAY PANEL WITH UP TO 8 RELAYS. EACH RELAY TO BE INDIVIDUALLY SCHEDULED THROUGH AN EASY TO USE INTEGRAL CLOCK WITH A BACKLIT 8–LINE LCD DISPLAY. RELAYS ARE TO BE SPST 20 AMP RATED, MECHANICALLY HELD CONTACTORS CAPABLE OF SWITCHING EITHER 120 OR 277VAC LOADS. MOUNTED NEXT TO EACH RELAY SHOULD BE A LED TO ANNUNCIATE STATUS AND A PUSHBUTTON TO TOGGLE THE RELAY'S STATE. PANEL SHALL HAVE A MULTITAP TRANSFROMER AND ACCEPT EITHER 120V OR 277V FOR POWER.

PANEL ENCLOSURE TO BE NEMA 3R, RATED FOR ENVIRONMENTS FROM 32 – 139°F, 5 – 95% RH NON–CONDENSING. PANEL TO COME WITH A SPLIT COVER HINGED IN THE CENTER SUCH THAT THE HIGH VOLTAGE SIDE MUST BE UNSCREWED TO ACCESS THE RELAYS, BUT THE LOW VOLTAGE SIDE CAN BE OPENED VIA A LOCKING LATCH. SURFACE OR FLUSH COVERS SHALL BE AVAILABLE.

EACH RELAY CAN BE CONTROLLED REMOTELY BY EXTERNAL SWITCHES OR MOTION DETECTORS. SWITCHES CAN BE 2– OR 3–WIRE, MOMENTARY OR MAINTAINED LOW VOLTAGE DEVICES. MOTION DETECTORS MUST PROVIDE A 24VDC PILOT SIGNAL TO CONTROL THE RELAYS. PANEL MUST BE ABLE TO INTERLOCK TIME BASED SCHEDULES WITH THE OCCUPANCY SENSOR INPUT, SO THAT LIGHTS SCHEDULED ON DURING THE DAY ARE NOT AFFECTED BY THE MOTION DETECTOR, BUT AFTER HOURS THE OCCUPANCY SENSOR HAS CONTROL OF THE RELAY. PANEL SHALL BE CAPABLE OF BLINK WARNING BEFORE "OFF" AND TRUE AFTER HOURS TIME DELAY.

ALL PROGRAMMING TO BE ENTERED VIA A SIMPLE KEYPAD. EACH RELAY CAN BE PROGRAMMED INDEPENDENTLY, OR RELAYS CAN BE GROUPED TOGETHER IN FIRMWARE TO FOLLOW THE SAME CHANNEL SCHEDULE. ON A DAILY 7–DAY REPEATING BASIS, RELAYS CAN BE ASSIGNED TO FOLLOW ANY OF THE FOLLOWING SCENARIOS:

(1) MANUAL ON / SCHED OFF
(2) SCHEDULED ON/OFF
(3) MANUAL ON / AS SWITCH OFF (FOR USE WITH AS–100 SWITCHES)
(4) PHOTOCELL ON/OFF
(5) PHOTO & SCHED ON/OFF
(6) ASTRONOMIC ON/OFF
(7) ASTRO AND SCHED ON/OFF

THE LCD SCREEN SHOULD NORMALLY SHOW THE CURRENT TIME AND DATE, AS WELL AS SUNRISE AND SUNSET TIMES FOR THAT DAY. RELAY CHANNELS CAN ALSO BE MONITORED FROM THE DISPLAY TO SEE THEIR STATUS – EITHER ON, OFF, OR MIXED. ADDITIONALLY THE RELAY GROUPS CAN BE OVERRIDEN FROM THE SCREEN. CONTEXT SENSITIVE HELP SHALL BE AVAILABLE FOR EACH SCREEN.

PANEL TO BE THE WATT STOPPER'S (800–852–2778) LP8 PANEL AND MUST BE UL LISTED 916, MEET LOCAL ENERGY CODES (CALIFORNIA CEC), AND HAVE A 1 YEAR WARRANTY.

## 8–RELAY CAPACITY
## LP8 RELAY PANEL

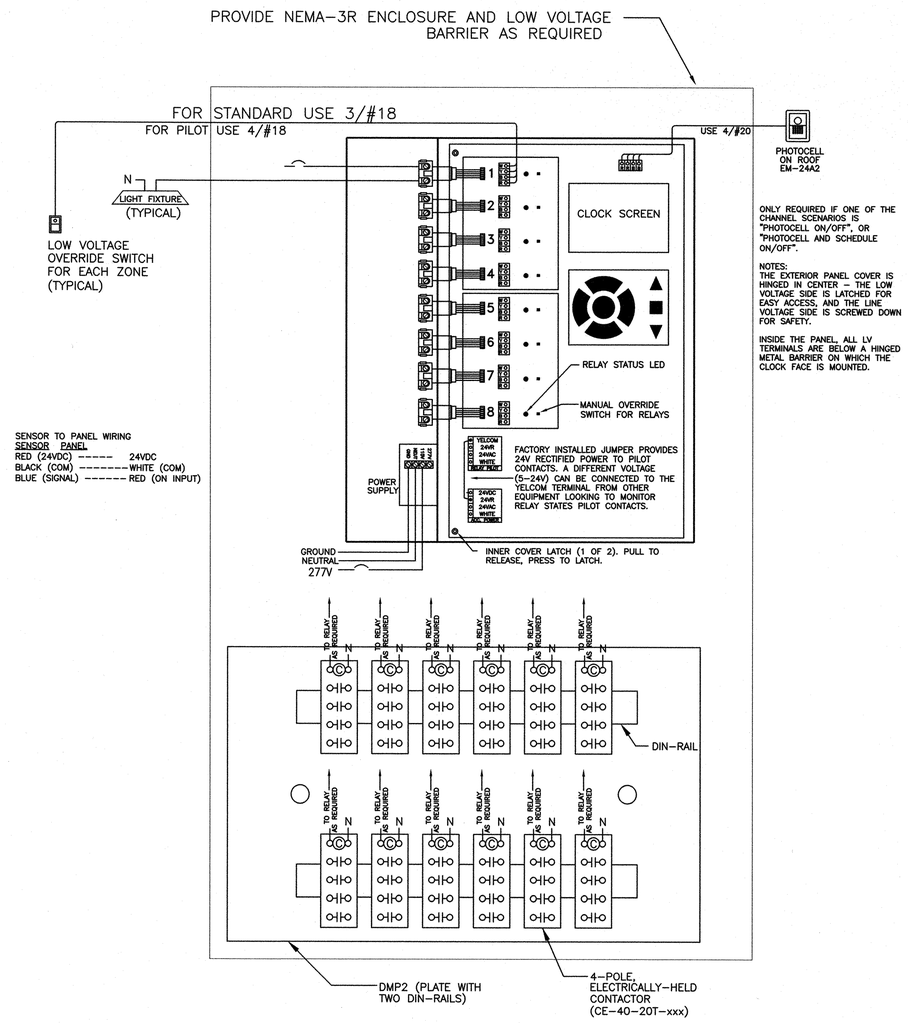


ONLY REQUIRED IF ONE OF THE CHANNEL SCENARIOS IS "PHOTOCELL ON/OFF", OR "PHOTOCELL AND SCHEDULE ON/OFF".

NOTES:
THE EXTERIOR PANEL COVER IS HINGED IN CENTER – THE LOW VOLTAGE SIDE IS LATCHED FOR EASY ACCESS, AND THE LINE VOLTAGE SIDE IS SCREWED DOWN FOR SAFETY.

INSIDE THE PANEL, ALL LV TERMINALS ARE BELOW A HINGED METAL BARRIER ON WHICH THE CLOCK FACE IS MOUNTED.


ACIES ENGINEERING
3371 Olcott Street
Santa Clara, CA 95054
ph: (408) 522-5255
fx: (408) 522-5260
info@acies.net

Copyright © 2016

REGISTERED PROFESSIONAL ENGINEER CARMEN J. LEE No.E18661 Exp.12/31/18 ELECTRICAL STATE OF CALIFORNIA

PROJECT NO. A10081001

REFERENCES:
HORIZONTAL: NAD83(2011)
VERTICAL: NAVD88
PLANFILE 272–26

CAUTION:
CHECK TRACING FOR LATEST REVISIONS

| NO. | REVISIONS | DATE | REV'D | APP'D |
|---|---|---|---|---|
| | | | | |

CAUTION: THIS PLAN MAY BE REDUCED 0 1" 2" ORIGINAL SCALE

DRAWN CARMEN LEE
DESIGNED CARMEN LEE E 18661 REG. ENGINEER NO.
CHECKED L. TRUJILLO C 63950 REG. ENGINEER NO.

PORT OF OAKLAND
530 WATER ST. OAKLAND, CALIFORNIA

MOTT MACDONALD

OAKLAND INTERNATIONAL AIRPORT
OAK RENTAL CAR CENTER IMPROVEMENTS
ELECTRICAL PANEL SCHEDULES

DATE: 01–13–17
SCALE: AS SHOWN
SHEET: 36 OF 53 SHEETS
LT5 | AA–4193

PRINT DATE: 02-03-17 16:23:52 C:\pwworking\hmm\wctar_wastewater\oot49256\d0221875\4193-036.dwg Printed by OAT49256

## LUMINAIRE LOCATION SUMMARY

| LUM NO | LABEL | X | Y | Z | ORIENT | TILT | SWITCHED |
|---|---|---|---|---|---|---|---|
| 48 | LA | 6065381. | 2095980. | 42 | 31.356 | 0 | ON |
| 49 | LA | 6065431. | 2096012. | 42 | 31.356 | 0 | ON |
| 50 | LA | 6065495. | 2095910. | 42 | 31.356 | 0 | ON |
| 51 | LA | 6065444. | 2095878. | 42 | 31.356 | 0 | ON |
| 63 | LA | 6065412. | 2095929. | 42 | 41.128 | 0 | ON |
| 65 | LB | 6065713. | 2096047. | 42 | 213.14 | 0 | ON |
| 69 | LB | 6065681. | 2095952. | 42 | 123.428 | 0 | ON |
| 70 | LB | 6065529. | 2095857. | 42 | 121.321 | 0 | ON |
| 71 | LA | 6065228. | 2095884. | 42 | 31.356 | 0 | ON |
| 72 | LA | 6065292. | 2095782. | 42 | 31.356 | 0 | ON |
| 73 | LA | 6065260. | 2095833. | 42 | 34.472 | 0 | ON |
| 74 | LB | 6065649. | 2096148. | 42 | 212.344 | 0 | ON |
| 78 | LB | 6065425. | 2095796. | 42 | 120.573 | 0 | ON |
| 84 | EX-2 | 6065597. | 2095411. | 42 | 344.359 | 0 | ON |
| 86 | LA | 6065777. | 2095210. | 42 | 32.521 | 0 | ON |
| 87 | LA | 6065838. | 2095116. | 42 | 33.275 | 0 | ON |
| 88 | LA | 6065892. | 2095030. | 42 | 32.905 | 0 | ON |
| 91 | LD | 6065684. | 2094947. | 42 | 20.907 | 0 | ON |
| 93 | LD | 6065634. | 2095058. | 42 | 23.106 | 0 | ON |
| 94 | LB | 6065656. | 2095194. | 42 | 306.303 | 0 | ON |
| 96 | LB | 6065879. | 2094927. | 42 | 117.728 | 0 | ON |
| 98 | LB | 6065786. | 2094868. | 42 | 117.475 | 0 | ON |
| 100 | LA | 6065763. | 2095067. | 42 | 25.821 | 0 | ON |
| 101 | LA | 6065687. | 2095090. | 42 | 29.376 | 0 | ON |
| 105 | LA | 6065737. | 2094982. | 42 | 25.821 | 0 | ON |
| 107 | EX-1 | 6065489. | 2095285. | 42 | 211.464 | 0 | ON |
| 108 | EX-3 | 6065513. | 2095309. | 42 | 302.826 | 0 | ON |
| 109 | EX-2 | 6065828. | 2095241. | 40 | 32.504 | 0 | ON |
| 111 | LB | 6065174. | 2095851. | 42 | 31.477 | 0 | ON |
| 112 | LB | 6065582. | 2096252. | 42 | 210.97 | 0 | ON |
| 113 | LB | 6065469. | 2096147. | 42 | 304.188 | 0 | ON |
| 114 | LB | 6065235. | 2095998. | 42 | 303.955 | 0 | ON |
| 117 | LA | 6065279. | 2095916. | 42 | 31.356 | 0 | ON |
| 118 | LA | 6065343. | 2095814. | 42 | 31.356 | 0 | ON |
| 121 | EX-1 | 6065422. | 2096185. | 42 | 299.746 | 0 | ON |
| 122 | EX-1 | 6065321. | 2096118. | 42 | 298.657 | 0 | ON |
| 123 | EX-1 | 6065218. | 2096053. | 42 | 306.253 | 0 | ON |
| 124 | EX-1 | 6065115. | 2095987. | 42 | 303.692 | 0 | ON |
| 125 | LA | 6065584. | 2096107. | 42 | 31.356 | 0 | ON |
| 126 | LA | 6065648. | 2096006. | 42 | 31.356 | 0 | ON |
| 127 | LA | 6065616. | 2096056. | 42 | 41.128 | 0 | ON |
| 128 | LA | 6065714. | 2095178. | 42 | 298.202 | 0 | ON |
| 129 | LA | 6065812. | 2094956. | 42 | 29.561 | 0 | ON |
| 132 | LA | 6065767. | 2095308. | 42 | 330.737 | 0 | ON |
| 133 | LA | 6065682. | 2095349. | 42 | 334.069 | 0 | ON |
| 137 | LA | 6065566. | 2095251. | 42 | 29.246 | 0 | ON |
| 139 | LC | 6065611. | 2095322. | 42 | 57.053 | 0 | ON |
| 142 | LA | 6065614. | 2095182. | 42 | 302.6 | 0 | ON |
| 143 | LB | 6065323. | 2095732. | 42 | 129.816 | 0 | ON |
| 144 | LB | 6065239. | 2095749. | 42 | 32.088 | 0 | ON |

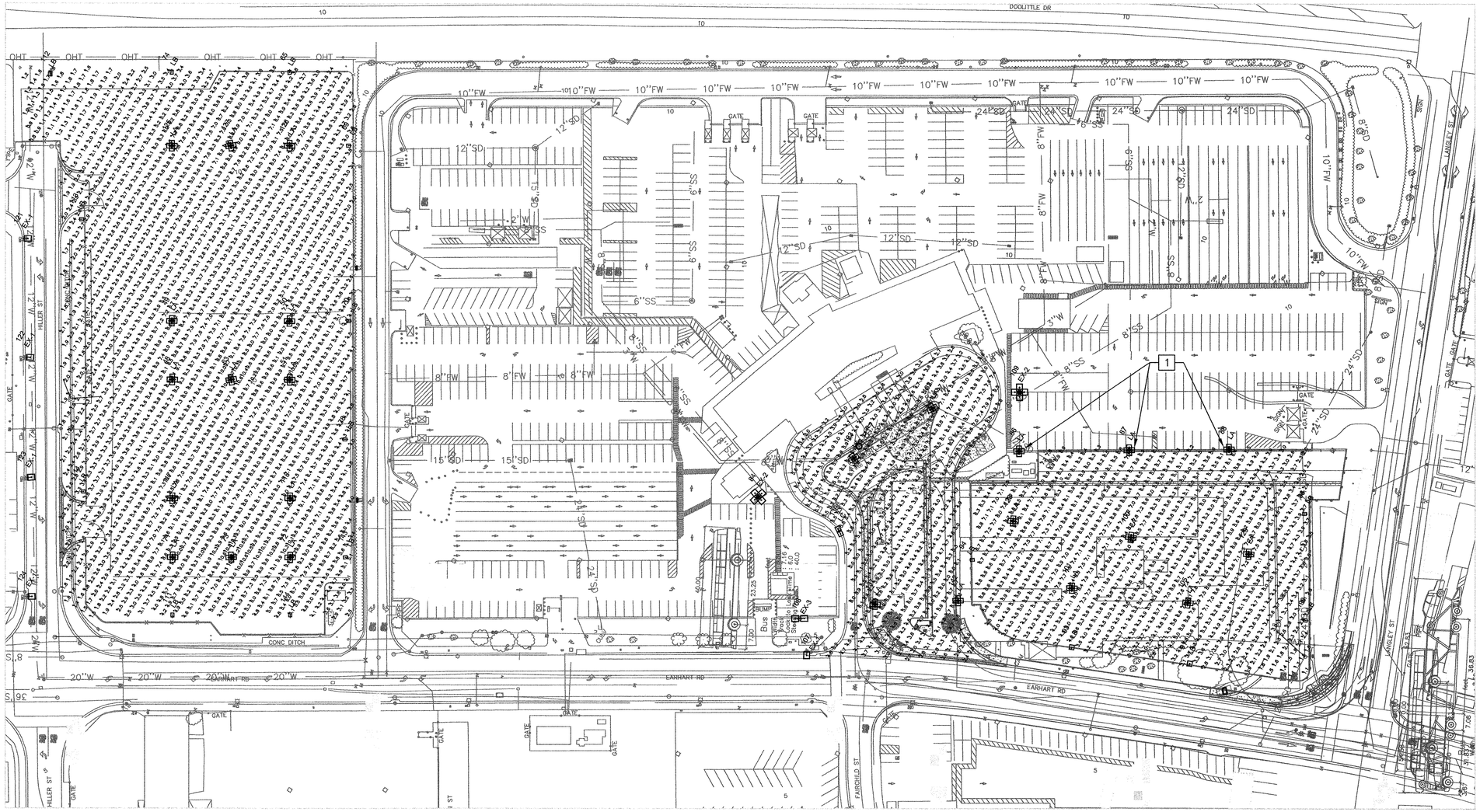


## LUMINAIRE SCHEDULE

| SYMBOL | QUANTITY | LABEL | ARRANGEMENT | LUMENS | LLF | DESCRIPTION | FILENAME |
|---|---|---|---|---|---|---|---|
| | 25 | LA | 4 @ 90 DEGREES | 18718 | 0.810 | GL18-3-210LA-641A-NW - 4 @ 90 DEGREES | GL18-3-210LA-641A-NW.IES |
| | 14 | LB | SINGLE | 18832 | 0.810 | GL18-4-210LA-641A-NW - SINGLE NO SHIELD | GL18-4-210LA-641A-NW.IES |
| | 1 | LC | BACK-BACK | 18718 | 0.810 | GL18-3-210LA-641A-NW - BACK TO BACK | GL18-3-210LA-641A-NW.IES |
| | 2 | LD | SINGLE | 14521 | 0.810 | GL18-4-210LA-641A-NW-HS - SINGLE WITH SHIELD | GL18-4-210LA-641A-NW-HS.IES |
| | 5 | EX-1 | SINGLE | 29618 | 0.720 | G18-4XL-400PSMH - EXISTING SINGLE | G18-4XL-400P.IES |
| | 2 | EX-2 | 4 @ 90 DEGREES | 29618 | 0.720 | G18-4XL-400PSMH - EXISTING 4 @ 90 DEGREES | G18-4XL-400P.IES |
| | 1 | EX-3 | BACK-BACK | 29618 | 0.720 | G18-4XL-400PSMH - EXISTING BACK TO BACK | G18-4XL-400P.IES |

## CALCULATION SUMMARY

PROJECT: PORT OF OAKLAND RENTAL CAR CENTER

| LABEL | CALC TYPE | UNITS | AVG | MAX | MIN | AVG/MIN | MAX/MIN | # PTS | DESCRIPTION |
|---|---|---|---|---|---|---|---|---|---|
| ZONE 1 | ILLUMINANCE | FC | 5.01 | 11.2 | 0.8 | 6.26 | 14.00 | 1680 | RYAN LOT |
| ZONE 2 | ILLUMINANCE | FC | 5.08 | 9.6 | 2.4 | 2.12 | 4.00 | 428 | BUS LOOP ROAD LOT |
| ZONE 3 | ILLUMINANCE | FC | 5.58 | 9.1 | 1.1 | 5.07 | 8.27 | 701 | SOUTH (L825) LOT |

## PROJECT NOTES (THIS SHEET)

1 LIGHT FIXTURES TO BE RETROFITTED ONTO EXISTING POLES 86, 87 AND 88.

N

60' 0 60' 120'
SCALE: 1" = 60'-0"

REGISTERED PROFESSIONAL ENGINEER LEOPOLDO TRUJILLO 63950 Exp. 9-30-18 CIVIL STATE OF CALIFORNIA

CAUTION: THIS PLAN MAY BE REDUCED 0 1" 2" ORIGINAL SCALE

PROJECT NO. A10081001

REFERENCES:
HORIZONTAL: NAD83(2011)
VERTICAL: NAVD88
PLANFILE 272-26

CAUTION:
CHECK TRACING FOR LATEST REVISIONS

| NO. | REVISIONS | DATE | REV'D | APP'D |
|---|---|---|---|---|
| | | | | |

DRAWN J. OATES
DESIGNED CELINA LEE C 72233 REG. ENGINEER NO.
CHECKED L. TRUJILLO C 63950 REG. ENGINEER NO.

PORT OF OAKLAND
530 WATER ST. OAKLAND, CALIFORNIA

MOTT MACDONALD

OAKLAND INTERNATIONAL AIRPORT
OAK RENTAL CAR CENTER IMPROVEMENTS
ELECTRICAL SITE LIGHTING PHOTOMETRIC PLAN

DATE: 01-13-17
SCALE: AS SHOWN
SHEET: 37 OF 53 SHEETS
LT6 AA-4193

PRINT DATE 02-03-17 16:19:47 C:\pwworking\tmm\water_wastewater\tru49263\d0221875\4193-037.dwg Printed by TRU49263

STATE OF CALIFORNIA
## OUTDOOR LIGHTING
CEC-NRCC-LTO-01-E (Revised 08/15)
CALIFORNIA ENERGY COMMISSION

| | |
|---|---|
| CERTIFICATE OF COMPLIANCE | NRCC-LTO-01-E |
| Outdoor Lighting | (Page 1 of 4) |
| Project Name: RENTAL CAR CENTER | Date Prepared: 12/13/2016 |

### A. General Information

| | |
|---|---|
| Project Address: 7600 EARHEART RD., OAKLAND AIRPORT, OAKLAND, CA | Total Illuminated Hardscape Area 163,400 sf |

Phase of Construction: ☑ New Construction ☐ Addition ☐ Alteration

Outdoor Lighting Zone (OLZ) ☐ OLZ-1 ☐ OLZ-2 ☑ OLZ-3 ☐ OLZ-4

I have confirmed with the AHJ which OLZ applies to this site. For default lighting zone designations, see Title 24 Part 6, §10-114

### B. LIGHTING COMPLIANCE DOCUMENTS
**(check box for each document included)**

*For detailed instructions on the use of this and all Energy Efficiency Standards compliance documents, refer to the Nonresidential Manual published by the California Energy Commission.*

| | | |
|---|---|---|
| ☑ | NRCC-LTO-01-E | Certificate of Compliance |
| ☑ | NRCC-LTO-02-E | Outdoor Lighting Controls Certificate of Compliance |
| ☑ | NRCC-LTO-03-E | Outdoor Lighting Power Allowance Certificate of Compliance |

### C. Summary of Allowed Outdoor Lighting Power

| | | | Watts |
|---|---|---|---|
| 1. | **Sum Total ALLOWED** Outdoor Lighting Wattage from NRCC-LTO-03-E, page 1 | = | 28593 |
| | Complies ONLY if **Installed ≤ Allowed** | | |
| 2. | **Sum Total INSTALLED** Outdoor lighting Wattage from NRCC-LTO-01-E, page 3 | | 24780 |

### D. Declaration of Required Installation Certificates
Declare by checking all Installation Certificates that will be submitted. (Retain copies and verify forms are completed and signed.)

| | |
|---|---|
| ☐ NRCI-LTO-01-E - Must be submitted for all buildings | ☐ Field Inspector |
| ☑ NRCI-LTO-02-E - Must be submitted for a lighting control system, or for an Energy Management Control System (EMCS), to be recognized for compliance. | ☐ Field Inspector |

### E. Declaration of Required Certificates of Acceptance
Declare by checking all of the Certificates of Acceptance that will be submitted. (Retain copies and verify forms are completed and signed.)

| | |
|---|---|
| ☑ NRCA-LTO-02-A - Must be submitted for outdoor lighting controls. | ☐ Field Inspector |

---

STATE OF CALIFORNIA
## OUTDOOR LIGHTING
CEC-NRCC-LTO-01-E (Revised 08/15)
CALIFORNIA ENERGY COMMISSION

| | |
|---|---|
| CERTIFICATE OF COMPLIANCE | NRCC-LTO-01-E |
| Outdoor Lighting | (Page 2 of 4) |
| Project Name: RENTAL CAR CENTER | Date Prepared: 12/13/2016 |

### F. Schedule of luminaires exempt from the outdoor lighting power requirements in §140.7

| Name or Symbol | Description of exempt luminaire in accordance with the exemptions |
|---|---|
| | |
| | |
| | |
| | |

### G. Schedule of luminaires exempt from the cutoff requirements in §130.2(b)

| Name or Symbol | Description of exempt luminaire in accordance with the exemptions |
|---|---|
| | |
| | |
| | |
| | |

### H. Schedule of luminaires exempt from the outdoor lighting control requirements in §130.2(c)

| Name or Symbol | Description of exempt luminaire in accordance with the exemptions |
|---|---|
| | |
| | |
| | |
| | |
| | |

---

STATE OF CALIFORNIA
## OUTDOOR LIGHTING
CEC-NRCC-LTO-01-E (Revised 08/15)
CALIFORNIA ENERGY COMMISSION

| | |
|---|---|
| CERTIFICATE OF COMPLIANCE | NRCC-LTO-01-E |
| Outdoor Lighting | (Page 3 of 4) |
| Project Name: RENTAL CAR CENTER | Date Prepared: 12/13/2016 |

### I. Outdoor Lighting Schedule and Field Inspection Energy Checklist

| Luminaire Schedule | | Installed Watts | | | | | Location | Cutoff | Field Inspector | |
|---|---|---|---|---|---|---|---|---|---|---|
| A | B | C | D | | E | F | G | H | I | |
| | | | How wattage was determined | | | | | | | |
| Name or Item Tag | Complete Luminaire Description | Watts per Luminaire | CEC Default from NA8 | According to §130.0(c) | Number of Luminaires | Total Installed Watts in this area (C x E) | Primary Function area in which these luminaires are installed | BUG Rating | Pass | Fail |
| LA | 4 lamp LED pole mount area, 210W LED | 840 | ☐ | ☑ | 25 | 21000 | PARKING LOT | 303 | ○ | ○ |
| LB | 1 lamp LED pole mount area, 210W LED | 210 | ☐ | ☑ | 14 | 2940 | PARKING LOT | 303 | ○ | ○ |
| LC | 2 lamp LED pole mount area, 210W LED | 420 | ☐ | ☑ | 1 | 420 | PARKING LOT | 303 | ○ | ○ |
| LD | 1 lamp LED pole mount area, 210W LED w/HSS | 210 | ☐ | ☑ | 2 | 420 | PARKING LOT | 303 | ○ | ○ |
| | | | ☐ | ☐ | | 0 | | | ○ | ○ |
| | | | ☐ | ☐ | | 0 | | | ○ | ○ |
| | | | ☐ | ☐ | | 0 | | | ○ | ○ |
| | | | ☐ | ☐ | | 0 | | | ○ | ○ |
| | | | ☐ | ☐ | | 0 | | | ○ | ○ |
| | | | ☐ | ☐ | | 0 | | | ○ | ○ |
| | | | ☐ | ☐ | | 0 | | | ○ | ○ |
| | | | ☐ | ☐ | | 0 | | | ○ | ○ |
| | | | ☐ | ☐ | | 0 | | | ○ | ○ |
| | | | ☐ | ☐ | | 0 | | | ○ | ○ |
| | | | ☐ | ☐ | | 0 | | | ○ | ○ |
| | | | ☐ | ☐ | | 0 | | | ○ | ○ |
| | | | ☐ | ☐ | | 0 | | | ○ | ○ |
| | | | ☐ | ☐ | | 0 | | | ○ | ○ |
| | | | ☐ | ☐ | | 0 | | | ○ | ○ |
| INSTALLED WATTS PAGE TOTAL: | | | | | | 24780 | Enter sum total of all pages or if only one page is used, enter PAGE total here (**Sum Total INSTALLED** Outdoor lighting wattage) | | 24780 | |

---

STATE OF CALIFORNIA
## OUTDOOR LIGHTING
CEC-NRCC-LTO-01-E (Revised 08/15)
CALIFORNIA ENERGY COMMISSION

| | |
|---|---|
| CERTIFICATE OF COMPLIANCE | NRCC-LTO-01-E |
| Outdoor Lighting | (Page 4 of 4) |
| Project Name: RENTAL CAR CENTER | Date Prepared: 12/13/2016 |

### DOCUMENTATION AUTHOR'S DECLARATION STATEMENT

1. I certify that this Certificate of Compliance documentation is accurate and complete.

| | |
|---|---|
| Documentation Author Name: Carmen Lee | Documentation Author Signature: |
| Company: Acies Engineering | Signature Date: 12/15/2016 |
| Address: 3371 Olcott Street | CEA Certification Identification (if applicable): |
| City/State/Zip: Santa Clara, CA 95054 | Phone: (408) 522-5255 |

### RESPONSIBLE PERSON'S DECLARATION STATEMENT

I certify the following under penalty of perjury, under the laws of the State of California:

1. The information provided on this Certificate of Compliance is true and correct.
2. I am eligible under Division 3 of the Business and Professions Code to accept responsibility for the building design or system design identified on this Certificate of Compliance (responsible designer).
3. The energy features and performance specifications, materials, components, and manufactured devices for the building design or system design identified on this Certificate of Compliance conform to the requirements of Title 24, Part 1 and Part 6 of the California Code of Regulations.
4. The building design features or system design features identified on this Certificate of Compliance are consistent with the information provided on other applicable compliance documents, worksheets, calculations, plans and specifications submitted to the enforcement agency for approval with this building permit application.
5. I will ensure that a completed signed copy of this Certificate of Compliance shall be made available with the building permit(s) issued for the building, and made available to the enforcement agency for all applicable inspections. I understand that a completed signed copy of this Certificate of Compliance is required to be included with the documentation the builder provides to the building owner at occupancy.

| | |
|---|---|
| Responsible Designer Name: Carmen Lee | Responsible Designer Signature: |
| Company : Acies Engineering | Date Signed: 12/15/0216 |
| Address: 3371 Olcott Street | License: E18661 |
| City/State/Zip: Santa Clara, CA 95054 | Phone: (408) 522-5255 |

---

**ACIES ENGINEERING**
3371 Olcott Street
Santa Clara, CA 95054
ph: (408) 522-5255
fx: (408) 522-5260
info@acies.net
Copyright © 2016

CARMEN J. LEE
No.E18661
Exp. 12/31/18
ELECTRICAL

PRINT DATE 02-03-17 16:31:18 C:\pwworking\hmm\water_wastewater\oat49256\d0221875\4193-038.dwg Printed by OAT49256

PROJECT NO. A10081001

REFERENCES:
HORIZONTAL: NAD83(2011)
VERTICAL: NAVD88
PLANFILE 272-26

CAUTION:
CHECK TRACING FOR LATEST REVISIONS

| NO. | REVISIONS | DATE | REV'D | APP'D |
|---|---|---|---|---|
| | | | | |
| | | | | |
| | | | | |
| | | | | |
| | | | | |

DRAWN CARMEN LEE
DESIGNED CARMEN LEE E 18661 REG. ENGINEER NO.
CHECKED L. TRUJILLO C 63950 REG. ENGINEER NO.

CAUTION: THIS PLAN MAY BE REDUCED 0 1" 2" ORIGINAL SCALE

**PORT OF OAKLAND**
530 WATER ST. OAKLAND, CALIFORNIA

**MOTT MACDONALD**

OAKLAND INTERNATIONAL AIRPORT
OAK RENTAL CAR CENTER IMPROVEMENTS
TITLE 24 BUILDING COMPLIANCE

DATE: 01-13-17
SCALE: AS SHOWN
SHEET: 38 OF 53 SHEETS
LT7 AA-4193

STATE OF CALIFORNIA
## OUTDOOR LIGHTING CONTROLS
CEC-NRCC-LTO-02-E (Revised 08/15) CALIFORNIA ENERGY COMMISSION

| | |
|---|---|
| CERTIFICATE OF COMPLIANCE | NRCC-LTO-02-E |
| Outdoor Lighting Controls | (Page 1 of 3) |
| Project Name: RENTAL CAR CENTER | Date Prepared: 12/13/2016 |

The NRCC-LTO-02-E shall be used to document all mandatory outdoor lighting controls that are applicable to the project.

**A. Mandatory Outdoor Lighting Control Declaration Statements**

Check all that apply:

- ☑ Lighting shall be controlled by self-contained lighting control devices which are certified to the Energy Commission according to the Title 20 Appliance Efficiency Regulations in accordance with §110.9(a).
- ☑ Lighting shall be controlled by a lighting control system or energy management control system in accordance with §110.9. An Installation Certificate shall be submitted in accordance with §130.4(b).
- ☑ All lighting controls and equipment shall comply with the applicable requirements in §110.9 and shall be installed in accordance with the manufacturer's instructions in accordance with §130.1
- ☐ Part-Night Outdoor Lighting Controls, as defined in Section 100.1(b), shall meet the requirements in Section 110.9(b)5
- ☐ All outdoor incandescent luminaires rated over 100 watts, determined in accordance with Section 130.0(c), shall be controlled by a motion sensor.
- ☑ All outdoor luminaires rated for use with lamps greater than 150 lamp watts, determined in accordance with Section 130.0(c), shall comply with Backlight, Uplight, and Glare (collectively referred to as "BUG") in accordance with Section 130.2(b)
- ☑ All installed outdoor lighting shall be controlled by a photocontrol or outdoor astronomical time-switch control in accordance with Section 130.2(c)1
- ☑ All installed outdoor lighting shall be circuited and independently controlled from other electrical loads by an automatic scheduling control in accordance with Section 130.2(c)2
- ☐ All installed outdoor lighting, where the bottom of the luminaire is mounted 24 feet or less above the ground, shall be controlled with automatic lighting controls in accordance with Section 130.2(c)3
- ☐ For Outdoor Sales Frontage, Outdoor Sales Lots, and Outdoor Sales Canopies lighting, an automatic lighting control in accordance with Section 130.2(c)4
- ☐ For Building Facade, Ornamental Hardscape and Outdoor Dining lighting, an automatic lighting control in accordance with Section 130.2(c)5
- ☑ Before an occupancy permit is granted for a newly constructed building or area, or a new lighting system serving a building, area, or site is operated for normal use, indoor lighting controls serving the building, area, or site shall be certified as meeting the Acceptance Requirements for Code Compliance in accordance with §130.4.(a). Outdoor lighting controls shall comply with the applicable requirements of Section 130.2(c) and Reference Nonresidential Appendix NA7.8



STATE OF CALIFORNIA
## OUTDOOR LIGHTING CONTROLS
CEC-NRCC-LTO-02-E (Revised 08/15) CALIFORNIA ENERGY COMMISSION

| | |
|---|---|
| CERTIFICATE OF COMPLIANCE | NRCC-LTO-02-E |
| Outdoor Lighting Controls | (Page 2 of 3) |
| Project Name: RENTAL CAR CENTER | Date Prepared: 12/13/2016 |

**B. Mandatory Outdoor Lighting Control Schedule and Field Inspection Checklist**

| Outdoor Lighting Control Schedule | | | Standards Complying With (✓ all that apply, or leave empty if Exempted) | | | | | | ✓ If Acceptance Test Required | Field Inspector | |
|---|---|---|---|---|---|---|---|---|---|---|---|
| A | B | C | D | E | F | G | H | I | J | K | |
| Location and Application of Luminaires being controlled | Type/ Description of Lighting Control (i.e. motion sensor, photocontrol, outdoor astronomical time-switch control, centralized time-based zone lighting control) | # of Units | §130.2(a) | §130.2(c)1 | §130.2(c)2 | §130.2(c)3 | §130.2(c)4 | §130.2(c)5 | | Pass | Fail |
| Parking Lot and Driveway | Astronomic time clock | 1 | | ✓ | ✓ | | | | ☐ | ○ | ○ |
| Parking Lot and Driveway | photocell | 1 | | ✓ | | | | | ☐ | ○ | ○ |
| | | | | | | | | | ☐ | ○ | ○ |
| | | | | | | | | | ☐ | ○ | ○ |
| | | | | | | | | | ☐ | ○ | ○ |
| | | | | | | | | | ☐ | ○ | ○ |
| | | | | | | | | | ☐ | ○ | ○ |
| | | | | | | | | | ☐ | ○ | ○ |
| | | | | | | | | | ☐ | ○ | ○ |
| | | | | | | | | | ☐ | ○ | ○ |
| | | | | | | | | | ☐ | ○ | ○ |
| | | | | | | | | | ☐ | ○ | ○ |
| | | | | | | | | | ☐ | ○ | ○ |
| | | | | | | | | | ☐ | ○ | ○ |
| | | | | | | | | | ☐ | ○ | ○ |
| | | | | | | | | | ☐ | ○ | ○ |
| | | | | | | | | | ☐ | ○ | ○ |



STATE OF CALIFORNIA
## OUTDOOR LIGHTING CONTROLS
CEC-NRCC-LTO-02-E (Revised 08/15) CALIFORNIA ENERGY COMMISSION

| | |
|---|---|
| CERTIFICATE OF COMPLIANCE | NRCC-LTO-02-E |
| Outdoor Lighting Controls | (Page 3 of 3) |
| Project Name: RENTAL CAR CENTER | Date Prepared: 12/13/2016 |

**DOCUMENTATION AUTHOR'S DECLARATION STATEMENT**

1. I certify that this Certificate of Compliance documentation is accurate and complete.

| | |
|---|---|
| Documentation Author Name: Carmen Lee | Documentation Author Signature: |
| Company: Acies Engineering | Signature Date: 12/15/2016 |
| Address: 3371 Olcott Street | CEA Certification Identification (if applicable): |
| City/State/Zip: Santa Clara, CA 95054 | Phone: (408) 522-5255 |

**RESPONSIBLE PERSON'S DECLARATION STATEMENT**

I certify the following under penalty of perjury, under the laws of the State of California:

1. The information provided on this Certificate of Compliance is true and correct.
2. I am eligible under Division 3 of the Business and Professions Code to accept responsibility for the building design or system design identified on this Certificate of Compliance (responsible designer).
3. The energy features and performance specifications, materials, components, and manufactured devices for the building design or system design identified on this Certificate of Compliance conform to the requirements of Title 24, Part 1 and Part 6 of the California Code of Regulations.
4. The building design features or system design features identified on this Certificate of Compliance are consistent with the information provided on other applicable compliance documents, worksheets, calculations, plans and specifications submitted to the enforcement agency for approval with this building permit application.
5. I will ensure that a completed signed copy of this Certificate of Compliance shall be made available with the building permit(s) issued for the building, and made available to the enforcement agency for all applicable inspections. I understand that a completed signed copy of this Certificate of Compliance is required to be included with the documentation the builder provides to the building owner at occupancy.

| | |
|---|---|
| Responsible Designer Name: Carmen Lee | Responsible Designer Signature: |
| Company: Acies Engineering | Date Signed: 12/15/2016 |
| Address: 3371 Olcott Street | License: E18661 |
| City/State/Zip: Santa Clara, CA 95054 | Phone: (408) 522-5255 |



ACIES ENGINEERING
3371 Olcott Street
Santa Clara, CA 95054
ph: (408) 522-5255
fx: (408) 522-5260
info@acies.net
Copyright © 2016

REGISTERED PROFESSIONAL ENGINEER CARMEN J. LEE No.E18661 Exp.12/31/18 ELECTRICAL STATE OF CALIFORNIA

PRINT DATE 02-03-17 16:35:11 C:\pwworking\bmm\water_wastewater\oal49256\d0221875\4193-039.dwg Printed by OAT49256

PROJECT NO. A10081001

CAUTION: THIS PLAN MAY BE REDUCED 0 1" 2" ORIGINAL SCALE

REFERENCES:
HORIZONTAL: NAD83(2011)
VERTICAL: NAVD88
PLANFILE 272-26

CAUTION:
CHECK TRACING FOR LATEST REVISIONS

| NO. | REVISIONS | DATE | REV'D | APP'D |
|---|---|---|---|---|
| | | | | |

DRAWN CARMEN LEE
DESIGNED CARMEN LEE E 18661 REG. ENGINEER NO.
CHECKED L. TRUJILLO C 63950 REG. ENGINEER NO.

PORT OF OAKLAND
530 WATER ST. OAKLAND, CALIFORNIA

MOTT MACDONALD

OAKLAND INTERNATIONAL AIRPORT
OAK RENTAL CAR CENTER IMPROVEMENTS
TITLE 24 BUILDING COMPLIANCE

DATE: 01-13-17
SCALE: AS SHOWN
SHEET: 39 OF 53 SHEETS
LT8 AA-4193

STATE OF CALIFORNIA
# OUTDOOR LIGHTING POWER ALLOWANCES
CEC-NRCC-LTO-03-E (Revised 08/15)

CALIFORNIA ENERGY COMMISSION

| | |
|---|---|
| CERTIFICATE OF COMPLIANCE | NRCC-LTO-03-E |
| Outdoor Lighting Power Allowances | (Page 1 of 4) |
| Project Name: RENTAL CAR CENTER | Date Prepared: 12/13/2016 |

## A. OUTDOOR LIGHTING POWER ALLOWANCE SUMMARY

| | | |
|---|---|---|
| 1. General Hardscape Lighting Power Allowance (Site Total from Section B of NRCC-LTO-03-E) | 1. | 28593.05 |
| 2. Additional Specific "use it or lose it" Lighting Power Allowances listed in each of these cells shall be identical to total allowed watts determined in Section C-1 to C-4 of NRCC-LTO-03-E. | | |

| PER APPLICATION from Section C-1 | | PER UNIT LENGTH (SALES FRONTAGE) from Section C-2 | | PER HARDSCAPE AREA (ORNAMENTAL LIGHTING) from Section C-3 | | PER SPECIFIC AREA from Section C-4. | | | |
|---|---|---|---|---|---|---|---|---|---|
| 0 | + | 0 | + | 0 | + | 0 | = | 2. | 0 |
| 3. **Sum Total ALLOWED** Outdoor Lighting Wattage (add rows 1 and 2) | | | | | | | | 3. | 28593.05 |

## B. GENERAL HARDSCAPE LIGHTING POWER ALLOWANCE FROM TABLE 140.7-A

| Area Wattage Allowance (AWA) | | | | Linear Wattage Allowance (LWA) | | | Initial Wattage Allowance (IWA) | Total General Hardscape Lighting Allowance |
|---|---|---|---|---|---|---|---|---|
| A | B | C | D | E | F | G | H | I |
| Name of area | Illuminated Hardscape Area | AWA Per Square Foot | AWA (B x C) | Perimeter Length of General Hardscape | LPA per Linear Foot | LWA (E x F) | IWA (Watts) | D + G + H |
| CAR RENTAL LOT | 283605 | 0.09 | 25524.45 | 3831 | .6 | 2298.6 | 770 | 28593.05 |
| | | | 0 | | | 0 | | 0 |
| | | | 0 | | | 0 | | 0 |
| | | | 0 | | | 0 | | 0 |
| | | | 0 | | | 0 | | 0 |
| | | | 0 | | | 0 | | 0 |
| | | | 0 | | | 0 | | 0 |
| | | | 0 | | | 0 | | 0 |
| | | | 0 | | | 0 | | 0 |
| | | | 0 | | | 0 | | 0 |
| | | | 0 | | | 0 | | 0 |
| | | | 0 | | | 0 | | 0 |
| | | | 0 | | | 0 | | 0 |
| | | | 0 | | | 0 | | 0 |
| | | | 0 | | | 0 | | 0 |
| | | | 0 | | | 0 | | 0 |
| | | | | | | | TOTAL | 28593.05 |



STATE OF CALIFORNIA
# OUTDOOR LIGHTING POWER ALLOWANCES
CEC-NRCC-LTO-03-E (Revised 08/15)

CALIFORNIA ENERGY COMMISSION

| | |
|---|---|
| CERTIFICATE OF COMPLIANCE | NRCC-LTO-03-E |
| Outdoor Lighting Power Allowances | (Page 2 of 4) |
| Project Name: RENTAL CAR CENTER | Date Prepared: 12/13/2016 |

## C. ADDITIONAL "USE IT OR LOSE IT" OUTDOOR LIGHTING POWER ALLOWANCES FOR SPECIFIC APPLICATIONS

- The additional specific outdoor lighting power allowance shall be the smaller of the allowed lighting power or the actual lighting power used.
- Use Outdoor Lighting Zone (OLZ) that is documented on page 1 of NRCC-LTO-01-E to calculate the specific wattage allowances.

### C-1. WATTAGE ALLOWANCE PER APPLICATION – Table 140.7-B

- Available only for qualifying locations, which include Building Entrances or Exits; Primary Entrances to Senior Care Facilities, Police Stations, Hospitals, Fire Stations, and Emergency Vehicle Facilities; Drive Up Windows; Vehicle Service Station Uncovered Fuel Dispenser
- If more than one luminaire type is used per location, use multiple rows for that location

| A | B | C | D | E | F | G | H | I | J |
|---|---|---|---|---|---|---|---|---|---|
| | ALLOTTED WATTS | | | DESIGN WATTS | | | | | |
| Name of Location for which allowance is claimed | Number of qualifying locations | Wattage Allowance per qualifying location | Allotted Watts (B x C) | Luminaire Code or Symbol | Luminaire Description | Luminaire Quantity | Watts per luminaire | Design Watts (G x H) | Allowed Watts (smaller of D or I) |
| | | | 0 | | | | | 0 | |
| | | | 0 | | | | | 0 | |
| | | | 0 | | | | | 0 | |
| | | | 0 | | | | | 0 | |
| | | | | | | | Sum total allowance per application on this site: | | 0 |

### C-2. WATTAGE ALLOWANCE PER UNIT LENGTH (Sales Frontage) from Table 140.7-B

- If more than one luminaire type is used per location, use multiple rows for that location

| A | B | C | D | E | F | G | H | I | J |
|---|---|---|---|---|---|---|---|---|---|
| | ALLOTTED WATTS | | | DESIGN WATTS | | | | | |
| Name of Location for which allowance is claimed | Linear feet of Sales Frontage | Wattage Allowance per linear foot | Allotted Watts (B x C) | Luminaire Code or Symbol | Luminaire Description | Luminaire Quantity | Watts per luminaire | Design Watts (G x H) | Allowed Watts (smaller of D or I) |
| | | | 0 | | | | | 0 | |
| | | | 0 | | | | | 0 | |
| | | | 0 | | | | | 0 | |
| | | | 0 | | | | | 0 | |
| | | | | | | | Sum total allowance for sales frontage on the site:. | | 0 |



STATE OF CALIFORNIA
# OUTDOOR LIGHTING POWER ALLOWANCES
CEC-NRCC-LTO-03-E (Revised 08/15)

CALIFORNIA ENERGY COMMISSION

| | |
|---|---|
| CERTIFICATE OF COMPLIANCE | NRCC-LTO-03-E |
| Outdoor Lighting Power Allowances | (Page 3 of 4) |
| Project Name: RENTAL CAR CENTER | Date Prepared: 12/13/2016 |

### C-3. WATTAGE ALLOWANCE PER SQUARE FOOT OF HARDSCAPE AREA (Ornamental Lighting) – Table 140.7-B

- Allowance for the total site illuminated hardscape area. Luminaires qualifying for this allowance shall be rated for 100 watts or less as determined in accordance with Section 130.0(c), and shall be post-top luminaires, lanterns, pendant luminaires, or chandeliers.
- If more than one luminaire type is used per location, use multiple rows for that location

| A | B | C | D | E | F | G | H | I | J |
|---|---|---|---|---|---|---|---|---|---|
| | ALLOTTED WATTS | | | DESIGN WATTS | | | | | |
| Name of area for which ornamental allowance is claimed | Square feet of Hardscape | Wattage Allowance per square foot | Allotted Watts (B x C) | Luminaire Code or Symbol | Luminaire Description | Luminaire Quantity | Watts per luminaire | Design Watts (G x H) | Allowed Watts (smaller of D or I) |
| | | | 0 | | | | | 0 | |
| | | | 0 | | | | | 0 | |
| | | | 0 | | | | | 0 | |
| | | | 0 | | | | | 0 | |
| | | | | | | | Sum total allowance for ornamental lighting on the site:. | | 0 |

### C-4. WATTAGE ALLOWANCE PER SQUARE FOOT OF SPECIFIC AREA - Table 140.7-B

- Allowances for Building Facades; Outdoor Sales Lots; Vehicle Service Station Hardscape; Vehicle Service Station Canopies; Sales Canopies; Non-sales Canopies; Guard Stations; Student Pick-up/Drop-off zone: Outdoor Dining; Special Security Lighting for Retail Parking and Pedestrian Hardscape.
- If more than one luminaire type is used per location, use multiple rows for that location

| A | B | C | D | E | F | G | H | I | J |
|---|---|---|---|---|---|---|---|---|---|
| | ALLOTTED WATTS | | | DESIGN WATTS | | | | | |
| Name of Location for which allowance is claimed | Illuminated Area of Application | Wattage Allowance per square foot | Allotted Watts (B x C) | Luminaire Code or Symbol | Luminaire Description | Luminaire Quantity | Watts per luminaire | Design Watts (G x H) | Allowed Watts (smaller of D or I) |
| | | | 0 | | | | | 0 | |
| | | | 0 | | | | | 0 | |
| | | | 0 | | | | | 0 | |
| | | | 0 | | | | | 0 | |
| | | | | | | | Sum total allowance for specific area on the site: | | 0 |



STATE OF CALIFORNIA
# OUTDOOR LIGHTING POWER ALLOWANCES
CEC-NRCC-LTO-03-E (Revised 08/15)

CALIFORNIA ENERGY COMMISSION

| | |
|---|---|
| CERTIFICATE OF COMPLIANCE | NRCC-LTO-03-E |
| Outdoor Lighting Power Allowances | (Page 4 of 4) |
| Project Name: RENTAL CAR CENTER | Date Prepared: 12/13/2016 |

**DOCUMENTATION AUTHOR'S DECLARATION STATEMENT**

1. I certify that this Certificate of Compliance documentation is accurate and complete.

| | |
|---|---|
| Documentation Author Name: Carmen Lee | Documentation Author Signature: |
| Company: Acies Engineering | Signature Date: 12/15/2016 |
| Address: 3371 Olcott Street | CEA Certification Identification (if applicable): |
| City/State/Zip: Santa Clara, CA 95054 | Phone: (408) 522-5255 |

**RESPONSIBLE PERSON'S DECLARATION STATEMENT**

I certify the following under penalty of perjury, under the laws of the State of California:

1. The information provided on this Certificate of Compliance is true and correct.
2. I am eligible under Division 3 of the Business and Professions Code to accept responsibility for the building design or system design identified on this Certificate of Compliance (responsible designer).
3. The energy features and performance specifications, materials, components, and manufactured devices for the building design or system design identified on this Certificate of Compliance conform to the requirements of Title 24, Part 1 and Part 6 of the California Code of Regulations.
4. The building design features or system design features identified on this Certificate of Compliance are consistent with the information provided on other applicable compliance documents, worksheets, calculations, plans and specifications submitted to the enforcement agency for approval with this building permit application.
5. I will ensure that a completed signed copy of this Certificate of Compliance shall be made available with the building permit(s) issued for the building, and made available to the enforcement agency for all applicable inspections. I understand that a completed signed copy of this Certificate of Compliance is required to be included with the documentation the builder provides to the building owner at occupancy.

| | |
|---|---|
| Responsible Designer Name: Carmen Lee | Responsible Designer Signature: |
| Company: Acies Engineering | Date Signed: 12/15/2016 |
| Address: 3371 Olcott Street | License: E-018661 |
| City/State/Zip: Santa Clara, CA 95054 | Phone: (408) 522-5255 |



ACIES ENGINEERING
3371 Olcott Street
Santa Clara, CA 95054
ph: (408) 522-5255
fx: (408) 522-5260
info@acies.net
Copyright © 2016

REGISTERED PROFESSIONAL ENGINEER CARMEN J. LEE No.E18661 Exp.12/31/18 ELECTRICAL STATE OF CALIFORNIA

PROJECT NO. A10081001

REFERENCES:
HORIZONTAL: NAD83(2011)
VERTICAL: NAVD88
PLANFILE 272-26

CAUTION:
CHECK TRACING FOR LATEST REVISIONS

| NO. | REVISIONS | DATE | REV'D | APP'D |
|---|---|---|---|---|
| | | | | |

DRAWN CARMEN LEE
DESIGNED CARMEN LEE E 18661 REG. ENGINEER NO.
CHECKED L. TRUJILLO C 63950 REG. ENGINEER NO.

CAUTION: THIS PLAN MAY BE REDUCED 0 1" 3" ORIGINAL SCALE

PORT OF OAKLAND
530 WATER ST. OAKLAND, CALIFORNIA

MOTT MACDONALD

OAKLAND INTERNATIONAL AIRPORT
OAK RENTAL CAR CENTER IMPROVEMENTS
TITLE 24 BUILDING COMPLIANCE

DATE: 01-13-17
SCALE: AS SHOWN
SHEET: 40 OF 53 SHEETS
LT9 AA-4193

PRINT DATE 02-03-17 16:38:20 C:\pwworking\nmm\water_wastewater\cat49256\d0221875\4193-040.dwg Printed by OAT49256

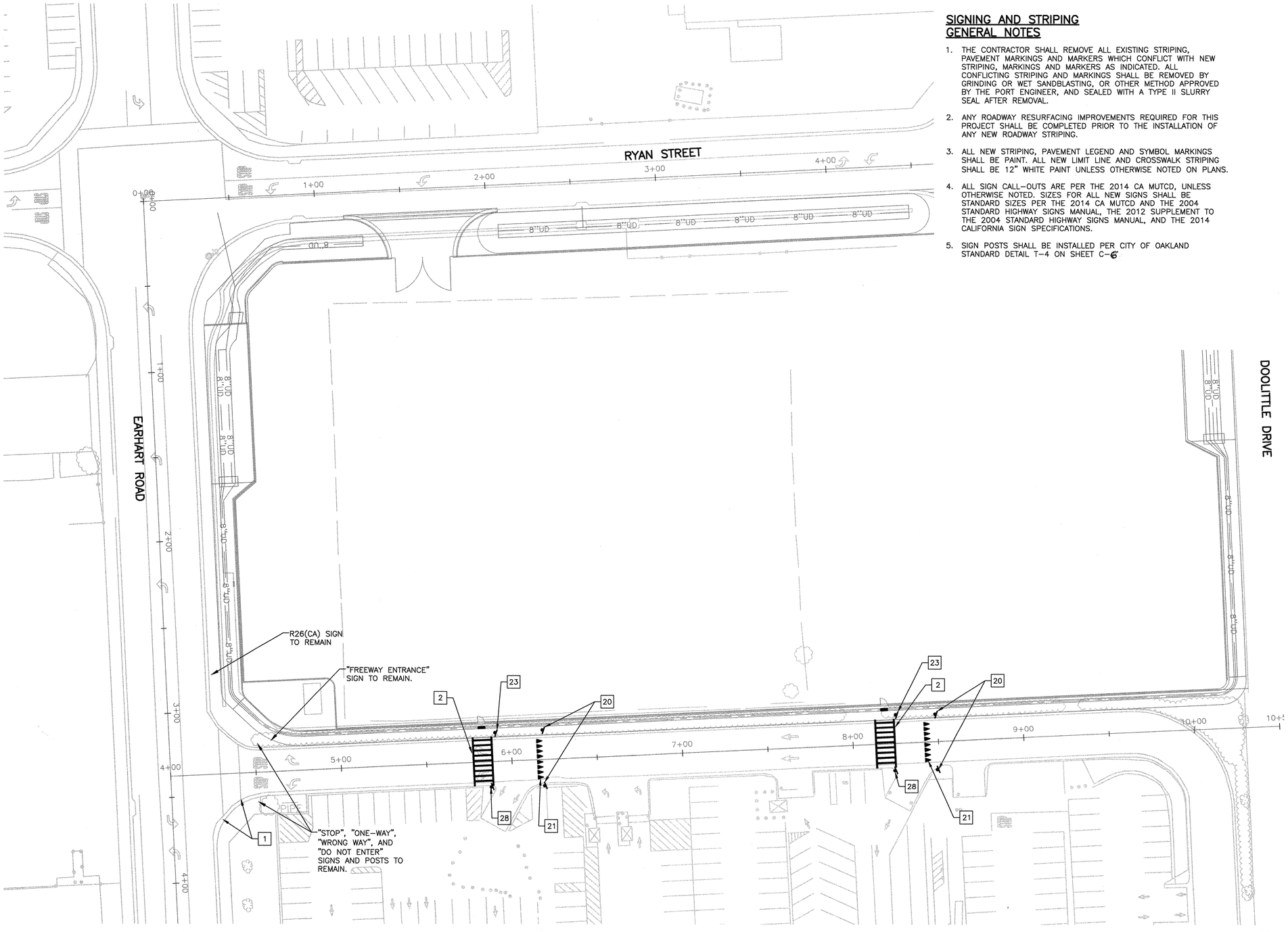


## SIGNING AND STRIPING GENERAL NOTES

1. THE CONTRACTOR SHALL REMOVE ALL EXISTING STRIPING, PAVEMENT MARKINGS AND MARKERS WHICH CONFLICT WITH NEW STRIPING, MARKINGS AND MARKERS AS INDICATED. ALL CONFLICTING STRIPING AND MARKINGS SHALL BE REMOVED BY GRINDING OR WET SANDBLASTING, OR OTHER METHOD APPROVED BY THE PORT ENGINEER, AND SEALED WITH A TYPE II SLURRY SEAL AFTER REMOVAL.
2. ANY ROADWAY RESURFACING IMPROVEMENTS REQUIRED FOR THIS PROJECT SHALL BE COMPLETED PRIOR TO THE INSTALLATION OF ANY NEW ROADWAY STRIPING.
3. ALL NEW STRIPING, PAVEMENT LEGEND AND SYMBOL MARKINGS SHALL BE PAINT. ALL NEW LIMIT LINE AND CROSSWALK STRIPING SHALL BE 12" WHITE PAINT UNLESS OTHERWISE NOTED ON PLANS.
4. ALL SIGN CALL-OUTS ARE PER THE 2014 CA MUTCD, UNLESS OTHERWISE NOTED. SIZES FOR ALL NEW SIGNS SHALL BE STANDARD SIZES PER THE 2014 CA MUTCD AND THE 2004 STANDARD HIGHWAY SIGNS MANUAL, THE 2012 SUPPLEMENT TO THE 2004 STANDARD HIGHWAY SIGNS MANUAL, AND THE 2014 CALIFORNIA SIGN SPECIFICATIONS.
5. SIGN POSTS SHALL BE INSTALLED PER CITY OF OAKLAND STANDARD DETAIL T-4 ON SHEET C-6

## SIGNING AND STRIPING NOTES

| | |
|---|---|
| 1 | CROSSWALK STRIPING PER CITY OF OAKLAND STANDARD DETAIL T-3 ON DRAWING C-6 |
| 2 | HIGH VISIBILITY CROSSWALK STRIPING PER DETAIL 1 ON DRAWING S3. |
| 3 | 12" SOLID YELLOW DIAGONAL MARKINGS. |
| 4 | DOUBLE YELLOW CENTERLINE STRIPE PER CALTRANS STANDARD PLAN A20A, DETAIL 22. |
| 5 | TYPE VII (R) ARROW PER CALTRANS STANDARD PLAN A24A. |
| 6 | PAVEMENT LEGEND PER CALTRANS STANDARD PLAN A24D. |
| 7 | PAVEMENT LEGEND PER CALTRANS STANDARD PLAN A24E. |
| 8 | ACCESSIBLE OFF-STREET PARKING LEGEND AND STRIPING PER CALTRANS STANDARD PLAN A90A. |
| 9 | CONCRETE WHEEL STOPS. |
| 10 | 4" SOLID WHITE STRIPE. |
| 11 | PARKING STALL TEE STRIPING PER CITY OF OAKLAND STANDARD DETAIL T-7 ON DRAWING C-6 |
| 12 | 8" SOLID WHITE STRIPE. |
| 13 | TYPE IV (L) ARROW PER CALTRANS STANDARD PLAN A24A. |
| 14 | PLAQUE R99B(CA) AND R7-8B SIGN BELOW RELOCATED R99(CA) SIGN PER CALTRANS STANDARD PLAN A90A ON NEW POST. |
| 15 | TYPE I 18'-0" ARROW PER CALTRANS STANDARD PLAN A24A. |
| 16 | TYPE III (L) ARROW PER CALTRANS STANDARD PLAN A24B. |
| 17 | TYPE III (R) ARROW PER CALTRANS STANDARD PLAN A24B. |
| 18 | RELOCATED "TAXI SIGN" ON NEW POST. |
| 19 | RELOCATED "TAXI SIGN" ON BACKSIDE OF R99(CA) POST. |
| 20 | R1-5 SIGN. |
| 21 | YIELD LINE MARKINGS PER CA MUTCD FIGURE 3B-16. |
| 22 | 8" SOLID WHITE DIAGONAL STRIPING. |
| 23 | W11-2 AND W16-7PL SIGNS ON NEW POST. |
| 24 | TYPE Q MARKER PER CA MUTCD FIGURE 2C-13 (CA). |
| 25 | NOT USED |
| 26 | PAINT CURB RED WITH 4" WHITE "NO PARKING" TEXT (40' O.C.) USING TWO COAT WATERBORNE PAINT PER LIMITS SHOWN ON THIS SHEET. |
| 27 | 12" TALL "TAXI ONLY" PAVEMENT MARKING CENTERED BETWEEN PARKING STALL TEES. |
| 28 | W11-2 AND W16-7PL SIGNS ON NEW POST. |
| 29 | RAISED CROSSWALK PER DETAIL 6 ON DRAWING C5. |

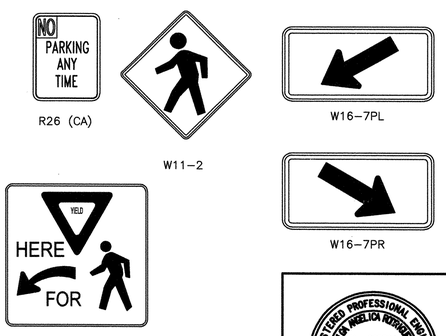


CAUTION: THIS PLAN MAY BE REDUCED 0 1" 2" ORIGINAL SCALE

30' 0 30' 60'
SCALE: 1" = 30'-0"

REGISTERED PROFESSIONAL ENGINEER KURT MELICK RODRIGUEZ No. C53594 EXP. 06-30-17 CIVIL STATE OF CALIFORNIA

PROJECT NO. A10081001

REFERENCES:
HORIZONTAL: NAD83(2011)
VERTICAL: NAVD88
PLANFILE 272-26

CAUTION:
CHECK TRACING FOR LATEST REVISIONS

| NO. | REVISIONS | DATE | REV'D | APP'D |
|---|---|---|---|---|
| | | | | |

DRAWN A. SHARMA
DESIGNED A. HENSCHKE C 81506 REG. ENGINEER NO.
CHECKED M. CANEPA C 48676 REG. ENGINEER NO.

PORT OF OAKLAND
530 WATER ST. OAKLAND, CALIFORNIA

MOTT MACDONALD

OAKLAND INTERNATIONAL AIRPORT
OAK RENTAL CAR CENTER IMPROVEMENTS
SIGNING AND STRIPING 1 OF 2

DATE: 01-13-17
SCALE: 1"=30'
SHEET: 41 OF 53 SHEETS
S1 AA-4193

PRINT DATE 02-03-17 12:44:14 C:\pwworking\tmm\water_wastewater\hen68848\d0221851\4193-041.dwg Printed by HEN68848

## SIGNING AND STRIPING NOTES

1. CROSSWALK STRIPING PER CITY OF OAKLAND STANDARD DETAIL T-3 ON DRAWING C6.
2. HIGH VISIBILITY CROSSWALK STRIPING PER DETAIL 1 ON DRAWING S3.
3. 12" SOLID YELLOW DIAGONAL MARKINGS.
4. DOUBLE YELLOW CENTERLINE STRIPE PER CALTRANS STANDARD PLAN A20A, DETAIL 22.
5. TYPE VII (R) ARROW PER CALTRANS STANDARD PLAN A24A.
6. PAVEMENT LEGEND PER CALTRANS STANDARD PLAN A24D.
7. PAVEMENT LEGEND PER CALTRANS STANDARD PLAN A24E.
8. ACCESSIBLE OFF-STREET PARKING LEGEND AND STRIPING PER CALTRANS STANDARD PLAN A90A.
9. CONCRETE WHEEL STOPS.
10. 4" SOLID WHITE STRIPE.
11. PARKING STALL TEE STRIPING PER CITY OF OAKLAND STANDARD DETAIL T-7 ON DRAWING C-6
12. 8" SOLID WHITE STRIPE.
13. TYPE IV (L) ARROW PER CALTRANS STANDARD PLAN A24A.
14. PLAQUE R99B(CA) AND R7-8B SIGN BELOW RELOCATED R99(CA) SIGN PER CALTRANS STANDARD PLAN A90A ON NEW POST.
15. TYPE I 18'-0" ARROW PER CALTRANS STANDARD PLAN A24A.
16. TYPE III (L) ARROW PER CALTRANS STANDARD PLAN A24B.
17. TYPE III (R) ARROW PER CALTRANS STANDARD PLAN A24B.
18. RELOCATED "TAXI SIGN" ON NEW POST.
19. RELOCATED "TAXI SIGN" ON BACKSIDE OF R99(CA) POST.
20. R1-5 SIGN.
21. YIELD LINE MARKINGS PER CA MUTCD FIGURE 3B-16.
22. 8" SOLID WHITE DIAGONAL STRIPING.
23. W11-2 AND W16-7PL SIGNS ON NEW POST.
24. TYPE Q MARKER PER CA MUTCD FIGURE 2C-13 (CA).
25. NOT USED
26. PAINT CURB RED WITH 4" WHITE "NO PARKING" TEXT (40' O.C.) USING TWO COAT WATERBORNE PAINT PER LIMITS SHOWN ON THIS SHEET.
27. 12" TALL "TAXI ONLY" PAVEMENT MARKING CENTERED BETWEEN PARKING STALL TEES.
28. W11-2 AND W16-7PL SIGNS ON NEW POST.
29. RAISED CROSSWALK PER DETAIL 6 ON DRAWING C5.

## SIGNING AND STRIPING GENERAL NOTES

1. SEE SHEET S1 FOR SIGNING AND STRIPING GENERAL NOTES.

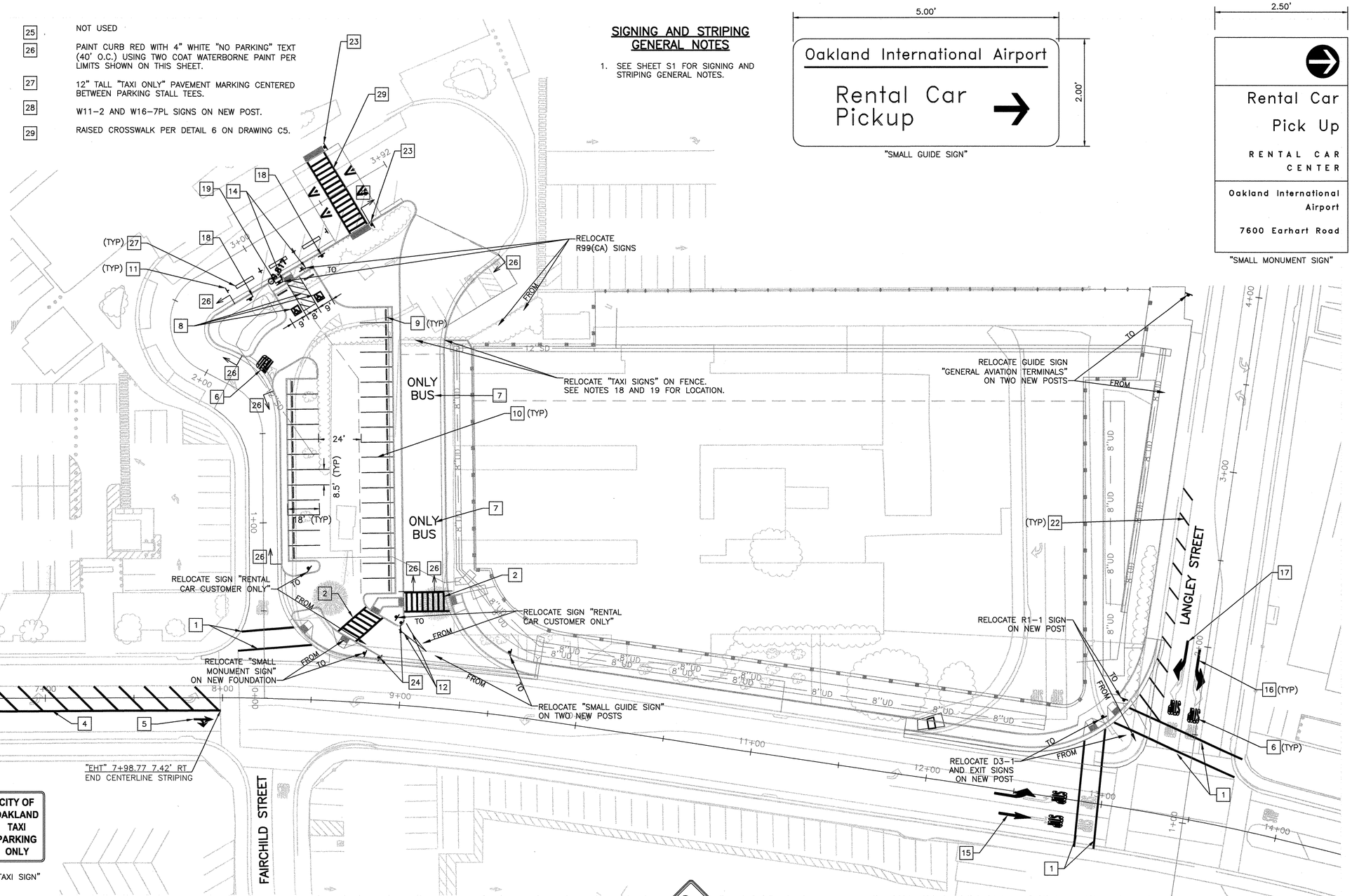





"SMALL GUIDE SIGN"


"SMALL MONUMENT SIGN"


"GENERAL AVIATION TERMINALS SIGN"


"TAXI SIGN"


R26(CA)


R99(CA)


R1-1

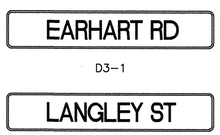


D3-1

D3-1


"EXIT SIGN"


R99B(CA)


R7-8b


"RENTAL CAR CUSTOMER ONLY SIGN"

W11-2

W16-7PL

W16-7PR


30' 0 30' 60'

SCALE: 1" = 30'-0"

CAUTION: THIS PLAN MAY BE REDUCED

0 1" 2" ORIGINAL SCALE

REGISTERED PROFESSIONAL ENGINEER ALEX ANGELICA RODRIGUEZ No. 053504 EXP. 06-30-17 CIVIL STATE OF CALIFORNIA

PROJECT NO. A10081001

REFERENCES:

HORIZONTAL: NAD83(2011)
VERTICAL: NAVD88
PLANFILE 272-26

CAUTION:
CHECK TRACING FOR LATEST REVISIONS

| NO. | REVISIONS | DATE | REV'D | APP'D |
|---|---|---|---|---|
| | | | | |

DRAWN A. SHARMA
DESIGNED A. HENSCHKE C 81506 REG. ENGINEER NO.
CHECKED M. CANEPA C 48676 REG. ENGINEER NO.

PORT OF OAKLAND
530 WATER ST. OAKLAND, CALIFORNIA

MOTT MACDONALD

OAKLAND INTERNATIONAL AIRPORT

OAK RENTAL CAR CENTER IMPROVEMENTS

SIGNING AND STRIPING 2 OF 2

DATE: 01-13-17
SCALE: 1"=30'
SHEET: 42 OF 53 SHEETS

S2 AA-4193

PRINT DATE 01-31-17 11:57:29 C:\pwworking\mmm\water_wastewater\hen68848\d0221851\4193-042.dwg Printed by HEN68848

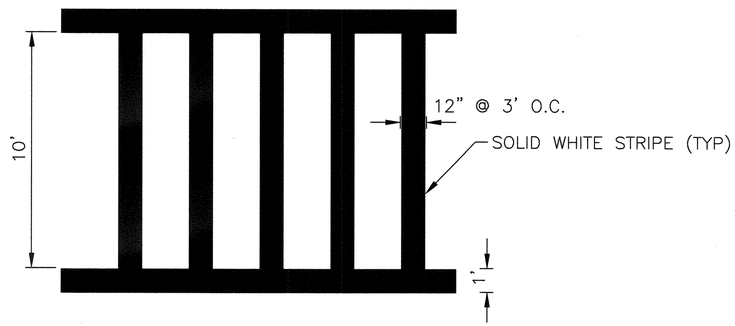


1 S3 S1 S2 HIGH VISIBILITY CROSSWALK STRIPING
NTS

PROJECT NO. A10081001

CAUTION: THIS PLAN MAY BE REDUCED 0 1" 2" ORIGINAL SCALE

REFERENCES:

HORIZONTAL: NAD83(2011)
VERTICAL: NAVD88
PLANFILE 272-26

CAUTION:
CHECK TRACING FOR LATEST REVISIONS

| NO. | REVISIONS | DATE | REV'D | APP'D |
|---|---|---|---|---|
| | | | | |

DRAWN A. SHARMA
DESIGNED A. HENSCHKE C 81506 REG. ENGINEER NO.
CHECKED M. CANEPA C 48676 REG. ENGINEER NO.

PORT OF OAKLAND
530 WATER ST. OAKLAND, CALIFORNIA

MOTT MACDONALD

OAKLAND INTERNATIONAL AIRPORT
OAK RENTAL CAR CENTER IMPROVEMENTS
SIGNING AND STRIPING DETAILS

DATE: 01-13-17
SCALE: NO SCALE
SHEET: 43 OF 53 SHEETS
S3 AA-4193

REGISTERED PROFESSIONAL ENGINEER
OLGA MEDLICA RODRIGUEZ
No. 053594
EXP. 06-30-17
CIVIL
STATE OF CALIFORNIA

PRINT DATE 01-19-17 14:31:10 C:\pwworking\bmm\water_wastewater\henc68848\d0221851\4193-043.dwg Printed by HENC68848

## IRRIGATION LEGEND

| | |
|---|---|
| | MAINLINE: 1120–SCHEDULE 40 PVC SOLVENT PIPE WITH SCHEDULE 40 PVC SOLVENT WELD FITTINGS. |
| | LATERAL LINE: SCHEDULE 40 PVC LATERAL LINE. |
| | SLEEVING: MIN 4" SCHEDULE 40 PVC SLEEVE AS SHOWN ON THE PLANS (18" MIN COVER UNDER PAVING, TYP.) |
| | CONTROLLER AND STATION NUMBER<br>AREA (SQ. FT.)<br>FLOW (GPM)<br>REMOTE CONTROL VALVE SIZE (IN INCHES)<br>ASSOCIATED REMOTE CONTROL VALVE |
| PVC LATERAL<br>SUPPLY HEADER<br>EXHAUST HEADER | DRIPLINE REMOTE CONTROL VALVE<br>DRIP ZONE: TORO DL2000 SERIES DRIPLINE WITH TRI–LOC FITTINGS, PART #RGP–212. TUBING TO BE INSTALLED 4" BELOW GRADE IN A 12" O.C. GRID ACCORDING TO DETAILS. SIZE EXHAUST HEADERS AS FOLLOWS: 1": 0–10 GPM, 1.25": 11–20 GPM. ALL EXHAUST HEADERS SHALL BE 1" SCH 40 PVC OR 1" SCH 40 FLEXIBLE PVC. USE SCH. 40 PVC SOLVENT WELD FITTINGS. EXTEND PVC HEADERS TO THE ENDS OF ALL DRIP ZONES TO BALANCE FLOW IF REQUIRED. SEE DETAILS FOR FURTHER INFORMATION. OR PORT APPROVED EQUAL. |

## IRRIGATION NOTES

1. THE INTENT OF THIS IRRIGATION SYSTEM IS TO PROVIDE THE MINIMUM AMOUNT OF WATER REQUIRED TO SUSTAIN GOOD PLANT HEALTH.
2. PROVIDE EACH IRRIGATION CONTROLLER WITH ITS OWN INDEPENDENT LOW VOLTAGE COMMON GROUND WIRE.
3. SCHEDULE A MEETING WITH THE IRRIGATION CONTROLLER MANUFACTURER'S REPRESENTATIVE, THE MAINTENANCE CONTRACTOR, THE PORT ENGINEER AND THE IRRIGATION CONTRACTOR AT THE SITE FOR INSTRUCTION ON THE PROPER PROGRAMMING AND OPERATION OF THE IRRIGATION CONTROLLER.
4. INSTALL BLACK PLASTIC VALVE BOXES WITH BOLT DOWN, NON–HINGED COVER MARKED "IRRIGATION". BOX BODY SHALL HAVE KNOCK OUTS. ACCEPTABLE VALVE BOX MANUFACTURER'S INCLUDE NDS, CARSON OR APPROVED EQUAL.
5. VALVE LOCATIONS SHOWN ARE DIAGRAMMATIC. INSTALL IN GROUND COVER/SHRUB AREAS.
6. LABEL CONTROL LINE WIRE AT EACH REMOTE CONTROL VALVE WITH A 2 1/4" X 2 3/4" POLYURETHANE I.D. TAG, INDICATING IDENTIFICATION NUMBER OF VALVE (CONTROLLER AND STATION NUMBER). ATTACH LABEL TO CONTROL WIRE. PERMANENTLY STAMP ALL VALVE BOX LIDS WITH APPROPRIATE IDENTIFICATION AS NOTED IN CONSTRUCTION DETAILS.
7. SET SPRINKLER HEADS PERPENDICULAR TO FINISH GRADE.
8. LOCATE BUBBLERS ON UPHILL SIDE OF PLANT.
9. THE SPRINKLER SYSTEM DESIGN IS BASED ON THE MINIMUM OPERATING PRESSURE SHOWN ON THE IRRIGATION DRAWINGS. VERIFY WATER PRESSURE PRIOR TO CONSTRUCTION. REPORT ANY DIFFERENCE BETWEEN THE WATER PRESSURE INDICATED ON THE DRAWINGS AND THE ACTUAL PRESSURE READING AT THE IRRIGATION POINT OF CONNECTION TO THE PORT ENGINEER PRIOR TO IRRIGATION SYSTEM INSTALLATION.
10. IRRIGATION DEMAND: REFER TO PLANS.
11. ADJUST PIPE SIZING AS DIRECTED BY PORT ENGINEER IF CHANGES IN LAYOUT OCCUR DURING STAKING AND CONSTRUCTION.
12. PIPE THREAD SEALANT COMPOUND: RECTOR SEAL #5 OR APPROVED EQUAL.

## IRRIGATION LEGEND

| SYMBOL | MANUFACT. | MODEL NUMBER | DESCRIPTION | NOZZLE GPM | OPERATING PSI | OPERATING RADIUS (FEET) |
|---|---|---|---|---|---|---|
| ● | TORO | 570S/FB–25–PC | SHRUB BUBBLER (1 PER SHRUB) | 0.25 | 30 | TRICKLE |
| ● | OR RAINBIRD | 1401 | SHRUB BUBBLER (1 PER SHRUB) | 0.25 | 30 | TRICKLE |
| — | OR PORT APPROVED EQUAL (P.A.E.) | | | | | |
| ◉ | TORO | T5–12P–CK–3.0LA | TORO POP–UP ROTARY SPRINKLER | 3.0 | 45 | 20–25 |
| ◉ | OR HUNTER | I–20–12–SS–3.0SR | HUNTER POP–UP GEAR DRIVEN ROTOR | 3.0 | 50 | 20–25 |
| — | OR P.A.E | | | | | |
| ◉ | TORO | T5–12P–CK–3.0LA | TORO POP–UP ROTARY SPRINKLER | 3.0 | 45 | 20–25 |
| ◉ | OR HUNTER | I–20–12–SS–3.0SR | HUNTER POP–UP GEAR DRIVEN ROTOR | 3.0 | 50 | 20–25 |
| — | OR P.A.E | | | | | |
| ◉ | TORO | T5–12P–CK–1.5LA | TORO POP–UP ROTARY SPRINKLER | 1.6 | 45 | 20–25 |
| ◉ | OR HUNTER | I–20–12–SS–1.5SR | HUNTER POP–UP GEAR DRIVEN ROTOR | 1.5 | 50 | 20–25 |
| — | OR P.A.E | | | | | |
| ◎ | TORO | 570Z–12P–XF–COM/ PRN–TF (360°) | TORO POP–UP STREAM ROTATING SPRINKLER | 2.56 | 40 | 16–18 |
| ◎ | OR HUNTER | I–20–12–SS–2.0SR | HUNTER POP–UP GEAR DRIVEN ROTOR | 2.0 | 50 | 16–18 |
| — | OR P.A.E | | | | | |
| ◐ | TORO | 220–26–SERIES | TORO REMOTE CONTROL VALVE | | | |
| ◐ | OR RAINBIRD | 100–EFB–CP | RAIN BIRD REMOTE CONTROL VALVES IN RECTANGULAR VALVE | | | |
| — | OR P.A.E | | | | | |
| ◘ | TORO | DZK–700 | TORO REMOTE CONTROL VALVE WITH A PRESSURE REGULATOR (SET TO 40 PSI) AND A 1" DISC FILTER | | | |
| ◘ | OR RAINBIRD | XCZ–100–PRBR | RAIN BIRD REMOTE CONTROL VALVE WITH PRESSURE REGULATING BASKET FILTER IN RECTANGULAR VALVE BOX | | | |
| — | OR P.A.E | | | | | |
| ●▶ | TORO | T–YD–500–34 | DRIPLINE AIR RELIEF VALVE | | | |
| ●▶ | OR RAINBIRD | ARV050 | DRIPLINE AIR RELIEF VALVE | | | |
| — | OR P.A.E | | | | | |
| ⊡ | TORO | 570Z–6P–SI–PRX/O–T–5–QP | TORO POP–UP SPRINKLER WITH SIDE INLET AND A CLOSED 5' NOZZLE TO BE USED AS DRIPLINE INDICATOR | | | |
| ◉ | OR RAINBIRD | OPERIND | DRIPLINE FLUSH VALVE | | | |
| — | OR P.A.E | | | | | |
| ●✕ | TORO | T–FJJ16 | TORO FLUSH VALVE | | | |
| ●✕ | OR RAINBIRD | MDCFCAP | DRIPLINE OPERATION INDICATOR | | | |
| — | OR P.A.E | | | | | |
| ⋈ | LEEMCO | LGT–XX–SS | LEEMCO STAINLESS STEEL GATE VALVE (LINE SIZE) IN VALVE BOX | | | |
| ⋈ | OR RAINBIRD | T–113–K | NIBCO GATE VALVE (LINE SIZE) IN VALVE BOX | | | |
| — | OR P.A.E | | | | | |
| ◆ | BUCKNER | QB44LRC10 | QUICK COUPLING VALVE IN VALVE BOX. | | | |
| ◆ | OR RAINBIRD | 44LRC–1" | QUICK COUPLING VALVE IN VALVE BOX. | | | |
| — | OR P.A.E | | | | | |
| ⟨C⟩ ⟨D⟩ | DIG LEIT | LEIT XRC020/LEIT KEY/MCOLXL/ ENCL–X–S/MKIT–X/ LEIT MULTI–PRO/ 30–721/ SKIT–8821–4 OR PORT APPROVED EQUAL. | DIG LEIT 20 STATION SOLAR CONTROLLER WITHIN A POLE MOUNTED STAINLESS STEEL ENCLOSURE. INCLUDING A PROGRAMMING KEY AND WIRELESS REMOTE. | | | |
| R | RAINBIRD OR P.A.E | RSD–CEx | RAIN SENSOR. INSTALL WITHIN ENCLOSURE ON CONTROLLER. | | | |

*P.A.E– PORT APPROVED EQUAL

CONSTRUCTION DOCUMENTS

CAUTION: THIS PLAN MAY BE REDUCED 0 1" 2" ORIGINAL SCALE

REGISTERED LANDSCAPE ARCHITECT JOHN C. HAYGOOD NO. 1595 EXP. 8/31/17 STATE OF CALIFORNIA

PROJECT NO. A10081001

REFERENCES:
HORIZONTAL: NAD83(2011)
VERTICAL: NAVD88
PLANFILE 272–26

CAUTION:
CHECK TRACING FOR LATEST REVISIONS

| NO. | REVISIONS | DATE | REV'D | APP'D |
|---|---|---|---|---|
| | | | | |

DRAWN L. BLANCHARD
DESIGNED C. MITCHELL
CHECKED S. KENNEY — REG. ENGINEER NO. 5779

PORT OF OAKLAND
530 WATER ST. OAKLAND, CALIFORNIA

MOTT MACDONALD

OAKLAND INTERNATIONAL AIRPORT
OAK RENTAL CAR CENTER IMPROVEMENTS
IRRIGATION LEGEND & NOTES

DATE: 01–09–17
SCALE: AS SHOWN
SHEET: 44 OF 53 SHEETS
11 AA–4193

PRINT DATE 02–03–17 15:44:28 S:\Projects\Mott MacDonald\Port of Oakland Auto Rental Center\CAD\Landscape\4193-44.dwg Printed by Simon

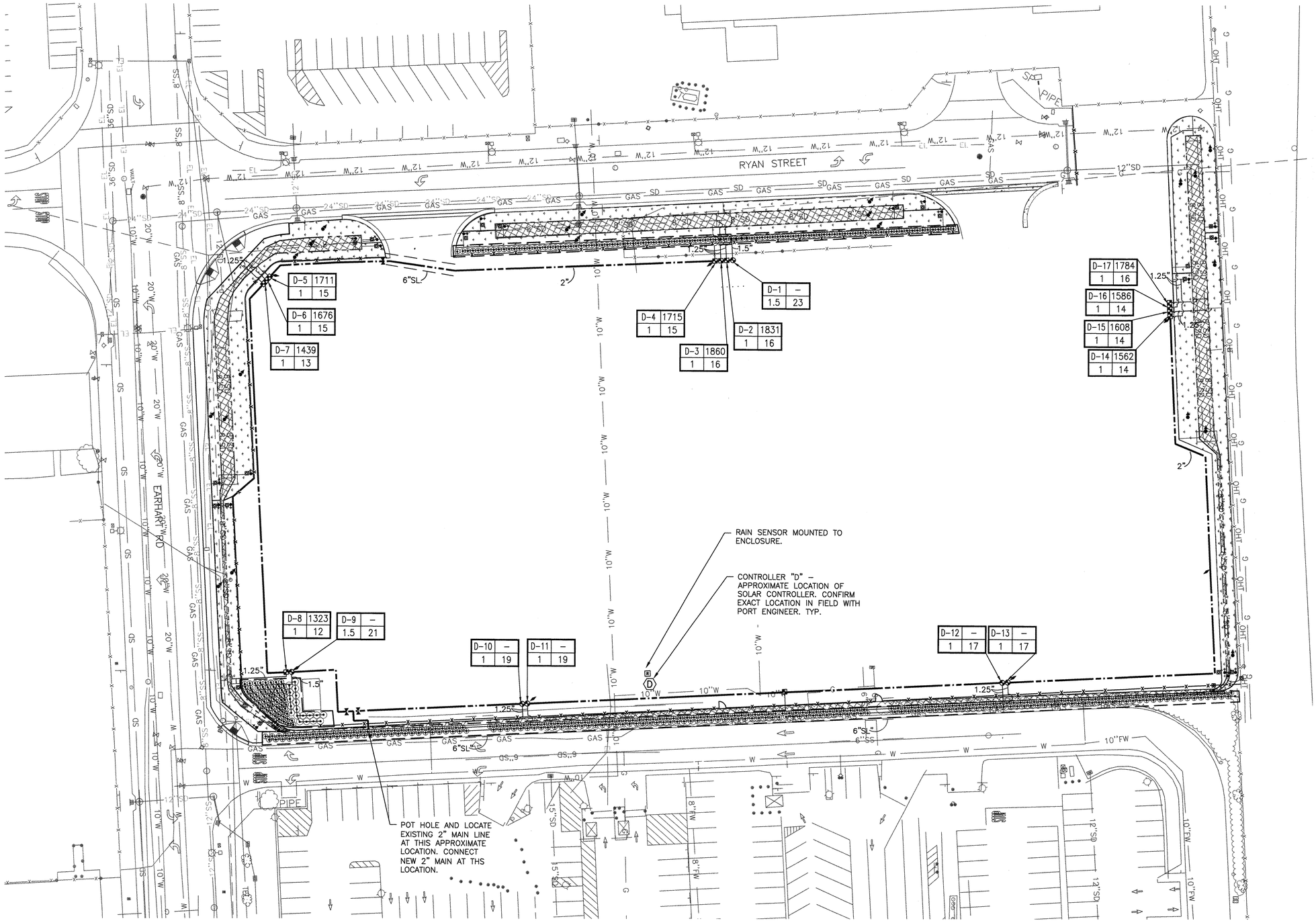


NOTES:

1. IRRIGATION EQUIPMENT MAY BE SHOWN WITHIN HARDSCAPE FOR GRAPHIC CLARITY ONLY. INSTALL ALL IRRIGATION EQUIPMENT WITHIN PLANTED AREAS. IRRIGATION PIPE AND WIRE CROSSING BENEATH HARDSCAPE SURFACES SHALL BE CONTAINED WITHIN SLEEVING OR SCHEDULE 40 PVC CONDUIT. SLEEVING SIZE SHALL BE A MINIMUM OF TWO TIMES THE AGGREGATE DIAMETER OF ALL PIPES CONTAINED WITHIN SLEEVE. PROVIDE VERTICAL SWEEP FOR ALL ELECTRICAL CONDUIT ON EACH SIDE OF HARDSCAPE AND TERMINATE ENDS AT 12" MINIMUM DEPTH AND 12" FROM HARDSCAPE SURFACE.
2. UNSIZED LATERAL LINE PIPING LOCATED DOWN STREAM OF 1" PIPING SHALL BE 3/4" IN SIZE (TYPICAL).
3. SIZING OF LATERAL PIPE SHALL BE AS FOLLOWS:

| | |
|---|---|
| .75" | 0–6 GPM |
| 1" | 7–12 GPM |
| 1.25" | 13–20 GPM |
| 1.5" | 21–32 GPM |

4. CONTRACTOR IS RESPONSIBLE FOR CUTTING, CAPPING, INSTALLING NEW HEADS AND REROUTING EXISTING IRRIGATION SYSTEMS TO MAKE SURE THAT THE EXISTING LANDSCAPING RECEIVES FULL IRRIGATION COVERAGE.

CONSTRUCTION DOCUMENTS

CAUTION: THIS PLAN MAY BE REDUCED 0 1" 2" ORIGINAL SCALE

30' 0 30' 60'
SCALE: 1" = 30'–0"

REGISTERED LANDSCAPE ARCHITECT LEAH C. HUGGOD NO. 1595 EXP. 8/31/17 STATE OF CALIFORNIA

PROJECT NO. A10081001

REFERENCES:
HORIZONTAL: NAD83(2011)
VERTICAL: NAVD88
PLANFILE 272-26

CAUTION:
CHECK TRACING FOR LATEST REVISIONS

| NO. | REVISIONS | DATE | REV'D | APP'D |
|---|---|---|---|---|
| | | | | |

DRAWN L. BLANCHARD
DESIGNED C. MITCHELL
CHECKED S. KENNEY REG. ENGINEER NO. 5779 REG. ENGINEER NO.

PORT OF OAKLAND
530 WATER ST. OAKLAND, CALIFORNIA

MOTT MACDONALD

OAKLAND INTERNATIONAL AIRPORT
OAK RENTAL CAR CENTER IMPROVEMENTS
IRRIGATION 1 OF 2

DATE: 01-09-17
SCALE: AS SHOWN
SHEET: 45 OF 53 SHEETS
12 AA-4193

PRINT DATE 01-18-17 16:09:01 S:\Projects\Mott MacDonald\Port of Oakland Auto Rental Center\CAD\Landscape\4193-45.dwg Printed by Simon

NOTES:

1. IRRIGATION EQUIPMENT MAY BE SHOWN WITHIN HARDSCAPE FOR GRAPHIC CLARITY ONLY. INSTALL ALL IRRIGATION EQUIPMENT WITHIN PLANTED AREAS. IRRIGATION PIPE AND WIRE CROSSING BENEATH HARDSCAPE SURFACES SHALL BE CONTAINED WITHIN SLEEVING OR SCHEDULE 40 PVC CONDUIT. SLEEVING SIZE SHALL BE A MINIMUM OF TWO TIMES THE AGGREGATE DIAMETER OF ALL PIPES CONTAINED WITHIN SLEEVE. PROVIDE VERTICAL SWEEP FOR ALL ELECTRICAL CONDUIT ON EACH SIDE OF HARDSCAPE AND TERMINATE ENDS AT 12" MINIMUM DEPTH AND 12" FROM HARDSCAPE SURFACE.

2. UNSIZED LATERAL LINE PIPING LOCATED DOWN STREAM OF 1" PIPING SHALL BE 3/4" IN SIZE (TYPICAL).

3. SIZING OF LATERAL PIPE SHALL BE AS FOLLOWS:

| | |
|---|---|
| .75" | 0–6 GPM |
| 1" | 7–12 GPM |
| 1.25" | 13–20 GPM |
| 1.5" | 21–32 GPM |

4. CONTRACTOR IS RESPONSIBLE FOR CUTTING, CAPPING, INSTALLING NEW HEADS AND REROUTING EXISTING IRRIGATION SYSTEMS TO MAKE SURE THAT THE EXISTING LANDSCAPING RECEIVES FULL IRRIGATION COVERAGE.

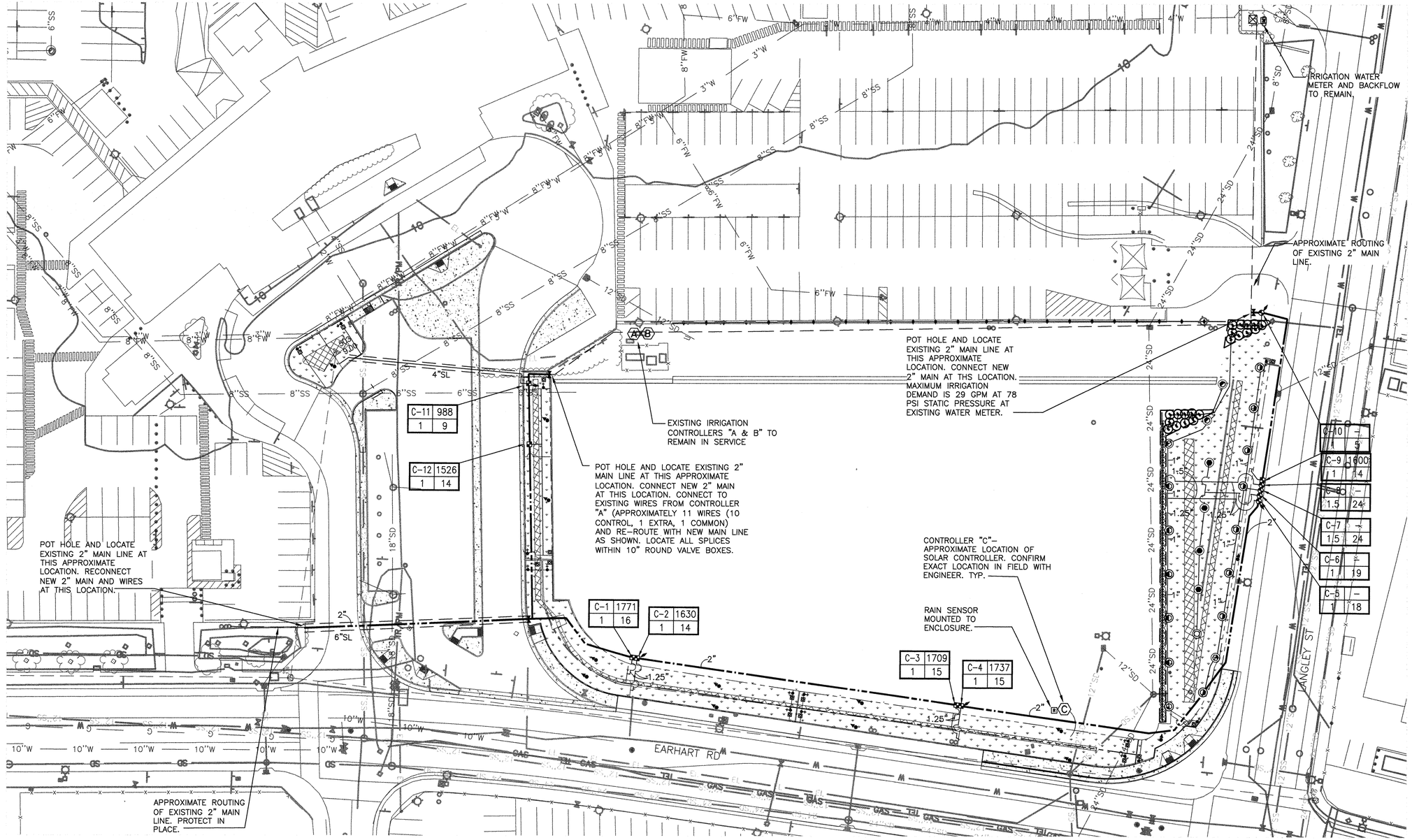


CONSTRUCTION DOCUMENTS

CAUTION: THIS PLAN MAY BE REDUCED 0 1" 2" ORIGINAL SCALE

REGISTERED LANDSCAPE ARCHITECT LEAH C. HAYGOOD NO. 1595 EXP. 8/31/17 STATE OF CALIFORNIA

PROJECT NO. A10081001

REFERENCES:

HORIZONTAL: NAD83(2011)
VERTICAL: NAVD88
PLANFILE 272-26

CAUTION:
CHECK TRACING FOR LATEST REVISIONS

| NO. | REVISIONS | DATE | REV'D | APP'D |
|---|---|---|---|---|
| | | | | |

DRAWN L. BLANCHARD
DESIGNED C. MITCHELL
CHECKED S. KENNEY REG. ENGINEER NO. 5779
REG. ENGINEER NO.

PORT OF OAKLAND
530 WATER ST. OAKLAND, CALIFORNIA

MOTT MACDONALD

OAKLAND INTERNATIONAL AIRPORT

OAK RENTAL CAR CENTER IMPROVEMENTS

IRRIGATION 2 OF 2

DATE: 01-09-17
SCALE: AS SHOWN
SHEET: 46 OF 53 SHEETS

13 AA-4193

PRINT DATE 01-18-17 16:10:10 S:\Projects\Mott MacDonald\Port of Oakland Auto Rental Center\CAD\Landscape\4193-46.dwg Printed by Simon

NOTE:
INSTALL COMPATIBLE REMOTE CONTROL VALVE SOLENOIDS FOR USE WITH THE LEIT SOLAR CONTROLLER OR APPROVED EQUAL.

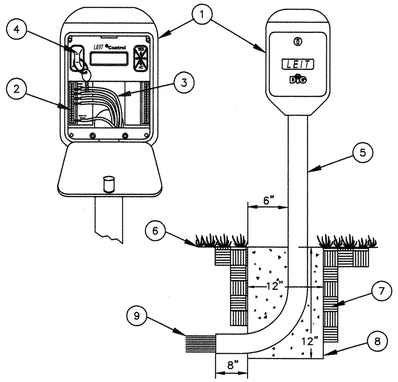


1. AMBIENT LIGHT POWERED IRRIGATION CONTROLLER.
2. TERMINAL STRIP
3. LOW VOLTAGE WIRES
4. PROGRAMMING KEY. MODEL NUMBER: LEIT KEY
5. 50" STEEL MOUNTING COLUMN. MODEL NUMBER: MCOLXL
6. FINISH GRADE
7. 6 1/2" BACKFILL SOIL
8. POURED CONCRETE BASE– 1–1/2 CU.FT. INSTALL PER MANUFACTURER'S INSTALLATION GUIDE.
9. DIRECT BURIAL LOW VOLTAGE CONTROL WIRING TO VALVES

## 1 PEDESTAL MOUNTED SOLAR CONTROLLER
NTS

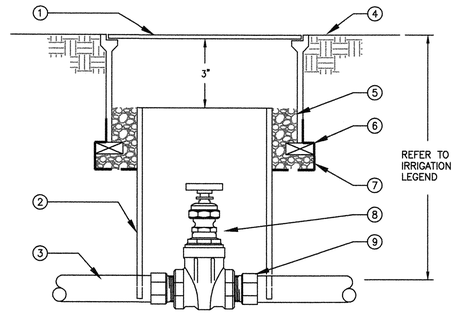


1. 10" ROUND PLASTIC VALVE BOX WITH BOLT DOWN LID.
2. 8" CLASS 160 OR SCHEDULE 40 PVC PIPE (NOTCH TO FIT OVER MAIN LINE PIPE).
3. PVC MAIN LINE.
4. FINISH GRADE.
5. PEA GRAVEL OR 3/4" DRAIN ROCK – 4" DEEP (NO SOIL IN VALVE BOX).
6. BRICK–2 TOTAL.
7. 19 GAUGE 1/2" SQUARE WIRE MESH.
8. GATE VALVE.
9. MALE ADAPTER. REFER TO LEGEND FOR FITTING TYPE.

## 2 GATE VALVE
NTS

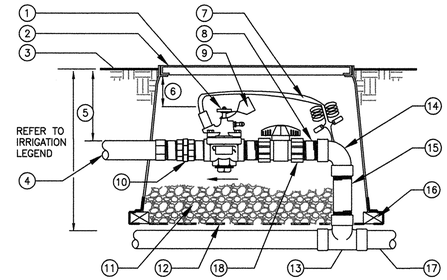


1. REMOTE CONTROL VALVE WITH FLOW CONTROL AND MANUAL BLEED
2. USE A 14" X 19" RECTANGULAR PLASTIC VALVE BOX WITH BOLT DOWN LID FOR 1" VALVES. FOR 1.5" AND LARGER VALVES INSTALL BALL VALVE WITHIN A SEPARATE 10" ROUND BOX OR ONE BALL VALVE PER MANIFOLD OF VALVES. GATE VALVE SIZE SHALL BE SAME AS LARGEST VALVE WITHIN MANIFOLD. ONE VALVE PER BOX– NO EXCEPTIONS. INSTALL BOX AS SHOWN IN BOX INSTALLATION DETAIL.
3. FINISH GRADE.
4. PVC LATERAL LINE.
5. REFER TO IRRIGATION LEGEND & SPECS.
6. 3" MIN, 6" MAX.
7. VALVE CONTROL WIRE– PROVIDE SEAL PACKS AT ALL SPLICES AND 3' OF EXCESS UF WIRE IN A 1" DIAMETER COIL.
8. SCHEDULE 80 PVC NIPPLE (4 TOTAL).
9. VALVE I.D. TAG (CONTROLLER AND STATION NUMBER).
10. SCHEDULE 80 PVC THREADED UNION.
11. PEA GRAVEL OR 3/4" DRAIN ROCK– 4" DEEP BELOW VALVE (NO SOIL IN VALVE BOX).
12. 19 GAUGE 1/2" SQUARE WIRE MESH.
13. UPC APPROVED SCHEDULE 40 PVC TEE.
14. SCHEDULE 80 PVC 90° ELBOW (TxT).
15. SCHEDULE 80 PVC NIPPLE– LENGTH AS REQUIRED.
16. BRICK–1 EACH CORNER.
17. PVC MAIN LINE.
18. SCHEDULE 80 PVC UNION BALL VALVE (ONE PER VALVE).

## 3 REMOTE CONTROL VALVE
NTS

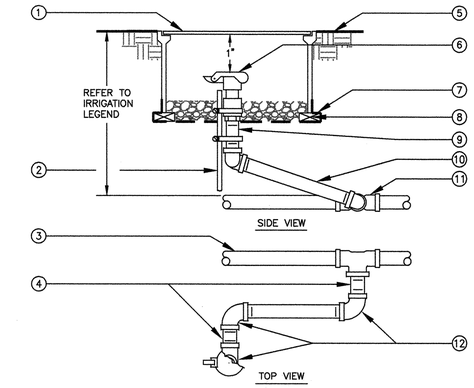


1. 10" ROUND PLASTIC VALVE BOX WITH BOLT DOWN LID.
2. 1 1/4" x 1 1/4" x 3/16" ANGLE IRON 30" LONG W/2 STAINLESS STEEL STRAPS (ONE AROUND QCV).
3. PVC MAIN LINE.
4. 3" LONG SCHEDULE 80 PVC THREADED NIPPLE.
5. FINISH GRADE.
6. QUICK COUPLING VALVE.
7. 19 GAUGE 1/2" SQUARE WIRE MESH.
8. BRICK – 2 TOTAL.
9. SCHEDULE 80 PVC THREADED NIPPLE.
10. 10" LONG SCHEDULE 80 PVC THREADED NIPPLE.
11. UPC APPROVED SCHEDULE 40 PVC TEE OR ELBOW.
12. SCHEDULE 80 PVC THREADED 90° ELL.

NOTE:
NIPPLES AND FITTINGS TO BE SAME SIZE AS VALVE IPT INLET THREAD SIZE.

## 4 QUICK COUPLING VALVE
NTS

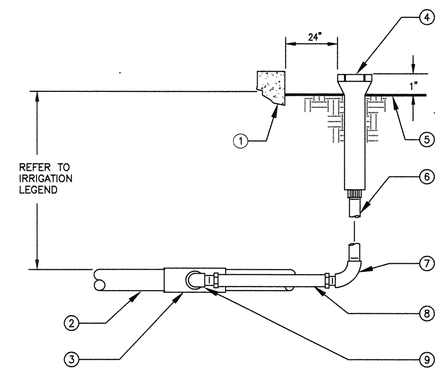


1. WALL, WALK, CURB OR BUILDING.
2. PVC LATERAL LINE.
3. UPC APPROVED SCHEDULE 40 PVC TEE OR ELBOW.
4. POP–UP SHRUB SPRAY SPRINKLER OR BUBBLER.
5. FINISH GRADE.
6. 1/2" SCHEDULE 80 PVC THREADED NIPPLE (LENGTH AS REQUIRED).
7. 1/2" SCHEDULE 40 PVC THREADED 90° ELL.
8. 1/2" FLEXIBLE IPS HOSE 6" LONG WITH MALE ADAPTERS OR 1/2" FLEXIBLE SWING JOINT (1/2" x 6") WITH A MINIMUM PRESSURE RATING OF 100 PSI.
9. 1/2" SCHEDULE 40 PVC STREET ELL.

## 5 POP–UP SPRAY SPRINKLER
NTS

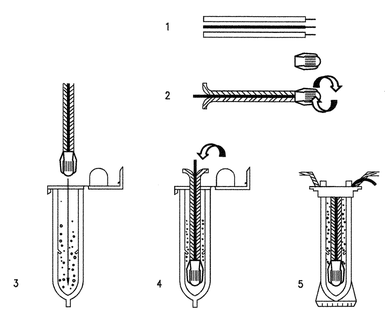


INSTRUCTIONS:
1. STRIP WIRES APPROXIMATELY 1/2" TO EXPOSE WIRE.
2. TWIST CONNECTOR AROUND WIRES CLOCKWISE UNTIL HAND TIGHT, DO NOT OVERTIGHTEN.
3. INSERT WIRE ASSEMBLY INTO PLASTIC TUBE UNTIL WIRE CONNECTOR SNAPS PAST LIP IN BOTTOM OF TUBE.
4. PLACE WIRES WHICH EXIT TUBE IN WIRE EXIT HOLES AND CLOSE CAP UNTIL IT SNAPS.
5. INSPECT FINAL SPLICE ASSEMBLY TO BE SECURE AND FINISHED.

## 6 WEATHERPROOF WIRE SPLICE ASSEMBLY
NTS

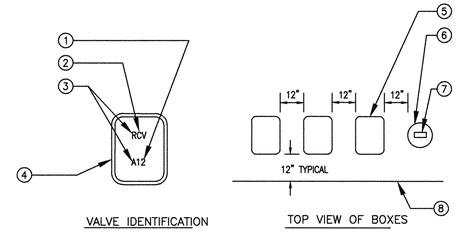


1. CONTROLLER AND STATION
2. VALVE TYPE
3. HEAT BRAND LETTERS AND NUMBERS INTO LID.
4. VALVE BOX COVER
5. RECTANGULAR VALVE BOX
6. ROUND VALVE BOX FOR QCV AND GATE VALVE.
7. HEAT BRAND LETTERS AND NUMBERS INTO LID (TYPICAL).
8. EDGE OF LAWN, WALK, FENCE, CURB, ETC.

INSTRUCTIONS:
1. CENTER VALVE BOX OVER REMOTE CONTROL VALVE TO FACILITATE SERVICING VALVE.
2. SET BOXES 1" ABOVE FINISH GRADE OR MULCH COVER IN GROUND COVER/SHRUB AREA AND FLUSH WITH FINISH GRADE IN TURF AREA.
3. SET RCV AND VALVE BOX ASSEMBLY IN GROUND COVER/SHRUB AREA WHERE POSSIBLE. INSTALL IN LAWN ONLY IF GROUND COVER DOES NOT EXIST ADJACENT TO LAWN.
4. SET BOXES PARALLEL TO EACH OTHER AND PERPENDICULAR TO EDGE OF LAWN, WALK, FENCE, CURB, ETC.
5. AVOID HEAVILY COMPACTING SOIL AROUND VALVE BOXES TO PREVENT COLLAPSE AND DEFORMATION OF VALVE BOX SIDES.
6. INSTALL EXTENSION BY VALVE BOX MANUFACTURER AS REQUIRED TO COMPLETELY ENCLOSE ASSEMBLY FOR EASY ACCESS.

## 7 VALVE BOX INSTALLATION
NTS

NOTES:
1. INSTALL ALL MAIN SUPPLY LINES AND LATERAL LINES IN SLEEVES UNDER PAVED SURFACES. INSTALL LOW VOLTAGE WIRES WITHIN A SEPARATE CONDUIT UNDER PAVED SURFACES. DO NOT TAPE WIRES WITHIN CONDUIT.

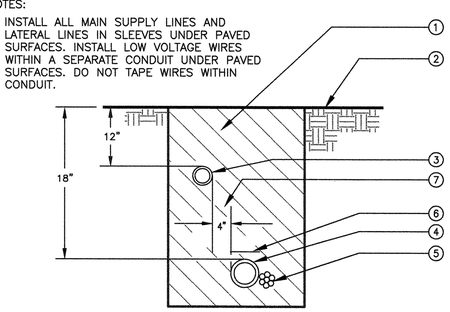


1. CLEAN BACKFILL MATERIAL.
2. FINISH GRADE.
3. LATERAL LINE.
4. MAIN LINE.
5. LOW VOLTAGE CONTROL WIRES. TAPE AND BUNDLE TUBING OR WIRING AT 10 FT. INTERVALS. WIRING SHALL BE LAID OUT LOOSELY IN THE TRENCH.
6. DETECTABLE WARNING TAPE OVER MAIN LINE – 3" ABOVE PIPE.
7. TYPICAL DISTANCE BETWEEN PIPES.

## 8 TRENCHING
NTS

CONSTRUCTION DOCUMENTS

CAUTION: THIS PLAN MAY BE REDUCED 0 1" 2" ORIGINAL SCALE

REGISTERED LANDSCAPE ARCHITECT LEAH C. HUGGED NO. 1585 EXP. 8/31/17 STATE OF CALIFORNIA

PROJECT NO. A10081001

REFERENCES:
HORIZONTAL: NAD83(2011)
VERTICAL: NAVD88
PLANFILE 272–26

CAUTION:
CHECK TRACING FOR LATEST REVISIONS

| NO. | REVISIONS | DATE | REV'D | APP'D |
|---|---|---|---|---|
| | | | | |

DRAWN L. BLANCHARD
DESIGNED C. MITCHELL
CHECKED S. KENNEY
REG. ENGINEER NO. 5779
REG. ENGINEER NO.

PORT OF OAKLAND
530 WATER ST. OAKLAND, CALIFORNIA

MOTT MACDONALD

OAKLAND INTERNATIONAL AIRPORT
OAK RENTAL CAR CENTER IMPROVEMENTS
IRRIGATION DETAILS 1 OF 4

DATE: 01–09–17
SCALE: AS SHOWN
SHEET: 47 OF 53 SHEETS
14 AA–4193

PRINT DATE 01–18–17 16:10:28 S:\Projects\Mott MacDonald\Port of Oakland Auto Rental Center\CAD\Landscape\4193-47.dwg Printed by Simon

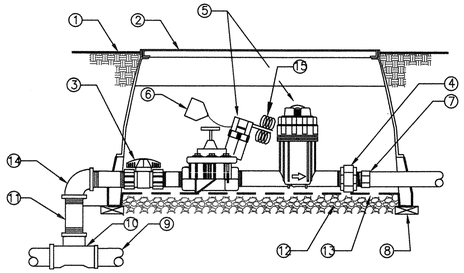

① FINISH GRADE.
② RECTANGULAR PLASTIC VALVE BOX WITH BOLT DOWN LID. ONE VALVE PER BOX– NO EXCEPTIONS. INSTALL BOX AS SHOWN IN BOX INSTALLATION DETAIL.
③ SCHEDULE 80 PVC UNION BALL VALVE (ONE PER VALVE).
④ SCHEDULE 80 PVC THREADED UNION.
⑤ REMOTE CONTROL VALVE DRIP ZONE KIT. (SHALL INCLUDE VALVE, FILTER AND A 40 PSI PRESSURE REDUCING VALVE)
⑥ VALVE I.D. TAG (CONTROLLER AND STATION NUMBER).
⑦ SCHEDULE 40 MALE ADAPTER
⑧ BRICK–1 EACH CORNER.
⑨ PVC MAIN LINE.
⑩ UPC APPROVED SCHEDULE 40 PVC TEE.
⑪ SCHEDULE 80 PVC NIPPLE–(4–TOTAL) LENGTH AS REQUIRED.
⑫ PEA GRAVEL OR 3/4" [20mm] DRAIN ROCK – 4" [102mm] DEEP BELOW VALVE (NO SOIL IN VALVE BOX).
⑬ 19 GAUGE 1/2" [13mm] SQUARE WIRE MESH.
⑭ SCHEDULE 80 PVC 90° ELBOW (TxT).
⑮ VALVE CONTROL WIRE– PROVIDE 3M–DBY SEAL PACKS AT ALL SPLICES AND 3' [1m] OF EXCESS UF WIRE IN A 1" [25mm] DIAMETER COIL.

## 1 REMOTE CONTROL VALVE–DRIPLINE

12 15 / 13

NTS

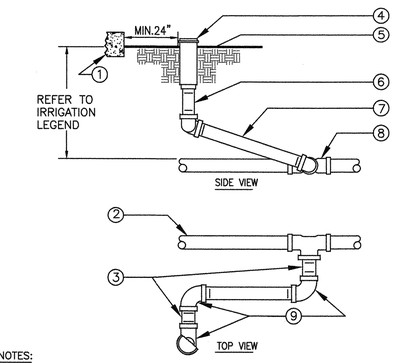


NOTES:
1. SET SPRINKLER 2" [50mm] ABOVE FINISH GRADE
2. NIPPLES AND FITTINGS TO BE SAME SIZE AS ROTARY SPRINKLER IPT INLET THREAD SIZE.

① WALL, WALK, CURB OR HEADER.
② PVC LATERAL LINE).
③ 3" [75mm] LONG SCHEDULE 80 PVC THREADED NIPPLE.
④ POP–UP ROTARY SPRINKLER.
⑤ FINISH GRADE.
⑥ SCHEDULE 80 PVC THREADED NIPPLE.
⑦ 10" [250mm] LONG SCHEDULE 80 PVC THREADED NIPPLE.
⑧ UPC APPROVED SCHEDULE 40 PVC TEE OR ELBOW.
⑨ SCHEDULE 80 PVC THREADED 90° ELL.

## 2 POP–UP ROTARY SPRINKLER

13 15

NTS

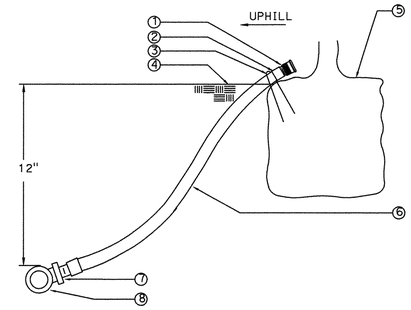


① BUBBLER (TO BE INSTALLED ON TOP OF ROOTBALL)
② 1/2" SCH. 40 MALE ADAPTER
③ 6" STEEL STAPLE
④ FINISH GRADE
⑤ SHRUB ROOTBALL
⑥ 1/2" IPS FLEXIBLE PVC
⑦ PVC TEE (SST), ELBOW (ST) OR FEMALE ADAPTER
⑧ PVC LATERAL LINE

## 3 SHRUB BUBBLER

12 15 / 13

NTS

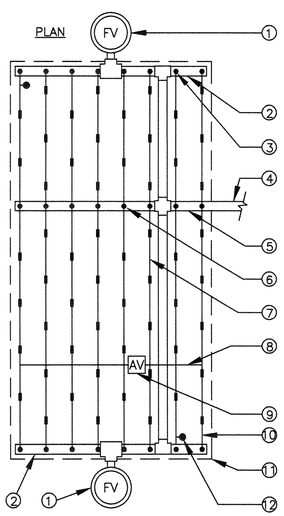


① FLUSH VALVE PLUMBED TO FLUSH MANIFOLD AT LOW POINT
② 1" FLEXIBLE PVC IPS HOSE FLUSH MANIFOLD.
③ MANIFOLD–TO–ELBOW CONNECTION (TYP).
④ PVC LATERAL LINE FROM VALVE. MINIMUM SIZE TO BE 1" UNLESS OTHERWISE NOTED.
⑤ PVC SUPPLY MANIFOLD. EXTEND TO END OF ZONE/EXHAUST HEADER.
⑥ MANIFOLD–TO–TEE CONNECTION.
⑦ DRIPLINE LATERAL.
⑧ AIR/VACUUM RELIEF LATERAL, BLANK POLY TUBING CENTERED ON MOUND OR BERM.
⑨ AIR/VACUUM RELIEF PLUMBED TO BLANK 5/8" POLY TUBING AT EACH HIGH POINT.
⑩ PERIMETER LATERALS 2" [50mm] TO 4" [100mm] FROM EDGE.
⑪ AREA PERIMETER.
⑫ DRIPLINE OPERATION INDICATOR LOCATED AT THE ENDS OF EACH DRIPLINE ZONE.

NOTE:
1. THE TOTAL LENGTH OF ALL INTERCONNECTED DRIP LINE OFF A SINGLE PVC SUPPLY LINE CONNECTION OR A SINGLE RUN OF DRIPLINE SHALL NOT EXCEED 300 FT.
2. INSTALL DRIPLINE 2–4" BELOW GRADE AND STAKE DOWN EVERY 4' OR AS REQUIRED.

## 4 DRIPLINE CENTER FEED LAYOUT

12 15 / 13

NTS

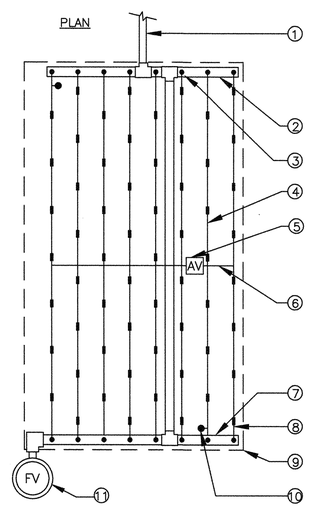


① PVC LATERAL LINE FROM VALVE. MINIMUM SIZE TO BE 1" UNLESS OTHERWISE NOTED.
② PVC FLUSH MANIFOLD. MINIMUM SIZE TO BE 1" UNLESS OTHERWISE NOTED.
③ MANIFOLD–TO–ELBOW CONNECTION (TYP).
④ DRIPLINE LATERAL.
⑤ AIR/VACUUM RELIEF VALVE PLUMBED TO BLANK 5/8" TUBING AT EACH HIGH POINT.
⑥ AIR/VACUUM RELIEF LATERAL, BLANK 5/8" POLY TUBING CENTERED ON MOUND OR BERM.
⑦ 1" FLEXIBLE PVC IPS HOSE FLUSH MANIFOLD.
⑧ PERIMETER LATERALS 2" [50mm] TO 4" [100mm] FROM EDGE.
⑨ AREA PERIMETER.
⑩ DRIP OPERATION INDICATOR LOCATED AT THE ENDS OF EACH DRIPLINE ZONES.
⑪ AUTOMATIC FLUSH VALVE PLUMBED TO FLUSH MANIFOLD AT LOW POINT.

NOTE:
1. THE TOTAL LENGTH OF ALL INTERCONNECTED DRIP LINE OFF A SINGLE PVC SUPPLY LINE CONNECTION OR A SINGLE RUN OF DRIPLINE SHALL NOT EXCEED 300 FT.
2. INSTALL DRIPLINE 2–4" BELOW GRADE AND STAKE DOWN EVERY 4' OR AS REQUIRED.

## 5 DRIPLINE END FEED LAYOUT

12 15 / 13

NTS

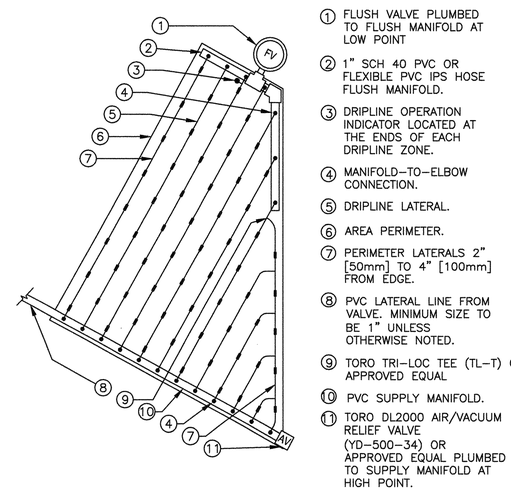


① FLUSH VALVE PLUMBED TO FLUSH MANIFOLD AT LOW POINT
② 1" SCH 40 PVC OR FLEXIBLE PVC IPS HOSE FLUSH MANIFOLD.
③ DRIPLINE OPERATION INDICATOR LOCATED AT THE ENDS OF EACH DRIPLINE ZONE.
④ MANIFOLD–TO–ELBOW CONNECTION.
⑤ DRIPLINE LATERAL.
⑥ AREA PERIMETER.
⑦ PERIMETER LATERALS 2" [50mm] TO 4" [100mm] FROM EDGE.
⑧ PVC LATERAL LINE FROM VALVE. MINIMUM SIZE TO BE 1" UNLESS OTHERWISE NOTED.
⑨ TORO TRI–LOC TEE (TL–T) OR APPROVED EQUAL
⑩ PVC SUPPLY MANIFOLD.
⑪ TORO DL2000 AIR/VACUUM RELIEF VALVE (YD–500–34) OR APPROVED EQUAL PLUMBED TO SUPPLY MANIFOLD AT HIGH POINT.

NOTE:
1. THE TOTAL LENGTH OF ALL INTERCONNECTED DRIP LINE OFF A SINGLE PVC SUPPLY LINE CONNECTION OR A SINGLE RUN OF DRIPLINE SHALL NOT EXCEED 300 FT.
2. INSTALL DRIPLINE 2–4" BELOW GRADE AND STAKE DOWN EVERY 4' OR AS REQUIRED.

## 6 DRIPLINE TRIANGULAR LAYOUT

12 15 / 13

NTS

# CONSTRUCTION DOCUMENTS

CAUTION: THIS PLAN MAY BE REDUCED 0 1" 2" ORIGINAL SCALE

REGISTERED LANDSCAPE ARCHITECT LEVI C. HAYGOOD NO. 1595 EXP. 8/31/17 STATE OF CALIFORNIA

PROJECT NO. A10081001

REFERENCES:
HORIZONTAL: NAD83(2011)
VERTICAL: NAVD88
PLANFILE 272–26

CAUTION:
CHECK TRACING FOR LATEST REVISIONS

| NO. | REVISIONS | DATE | REV'D | APP'D |
|---|---|---|---|---|
| | | | | |

DRAWN L. BLANCHARD
DESIGNED C. MITCHELL REG. ENGINEER NO.
CHECKED S. KENNEY 5779 REG. ENGINEER NO.

PORT OF OAKLAND
530 WATER ST. OAKLAND, CALIFORNIA

MOTT MACDONALD

OAKLAND INTERNATIONAL AIRPORT
OAK RENTAL CAR CENTER IMPROVEMENTS
IRRIGATION DETAILS 2 OF 4

DATE: 01–09–17
SCALE: AS SHOWN
SHEET: 48 OF 53 SHEETS
15 AA–4193

PRINT DATE 01-18-17 16:10:42 S:\Projects\Mott MacDonald\Port of Oakland Auto Rental Center\CAD\Landscape\4193-48.dwg Printed by Simon

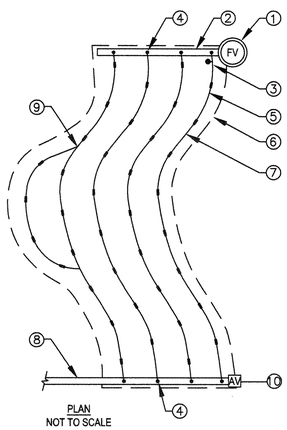


PLAN
NOT TO SCALE

1. FLUSH VALVE PLUMBED TO FLUSH MANIFOLD AT LOW POINT
2. 1" SCH 40 PVC OR FLEXIBLE PVC IPS HOSE FLUSH/EXHAUST MANIFOLD.
3. DRIPLINE OPERATION INDICATOR LOCATED AT THE ENDS OF EACH DRIPLINE ZONE.
4. MANIFOLD–TO–ELBOW CONNECTION.
5. DRIPLINE LATERAL.
6. AREA PERIMETER.
7. PERIMETER LATERALS 2" [50mm] TO 4" [100mm] FROM EDGE.
8. PVC SUPPLY LINE/HEADER FROM VALVE. MINIMUM SIZE TO BE 1" UNLESS OTHERWISE NOTED.
9. TORO TRI–LOC TEE (TL–T) OR APPROVED EQUAL
10. TORO DL2000 AIR/VACUUM RELIEF VALVE (YD–500–34) OR APPROVED EQUAL. PLUMBED TO SUPPLY MANIFOLD AT HIGH POINT.

NOTE:
1. THE TOTAL LENGTH OF ALL INTERCONNECTED DRIP LINE OFF A SINGLE PVC SUPPLY LINE CONNECTION OR A SINGLE RUN OF DRIPLINE SHALL NOT EXCEED 300 FT.
2. INSTALL DRIPLINE 2–4" BELOW GRADE AND STAKE DOWN EVERY 4' OR AS REQUIRED.

## 1 DRIPLINE ODD CURVE LAYOUT
12 | 16 — 13
NTS

ISOMETRIC

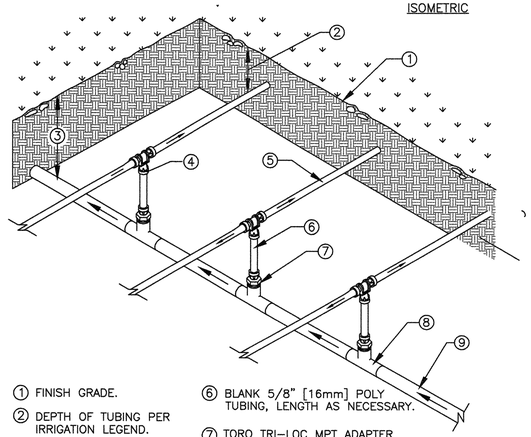

1. FINISH GRADE.
2. DEPTH OF TUBING PER IRRIGATION LEGEND.
3. DEPTH OF PVC LATERAL LINE PER IRRIGATION LEGEND
4. TORO TRI–LOC TEE (TL–T) OR APPROVED EQUAL
5. DRIPLINE TUBING.
6. BLANK 5/8" [16mm] POLY TUBING, LENGTH AS NECESSARY.
7. TORO TRI–LOC MPT ADAPTER (TL–M50) OR APPROVED EQUAL
8. PVC TEE (SxSxT) WITH 1/2" [13mm] FPT OUTLET.
9. PVC LATERAL LINE FROM REMOTE CONTROL VALVE.

NOTE:
THE TOTAL LENGTH OF A SINGLE DRIP LINE RUN SHALL NOT EXCEED 300 FT.

## 2 DRIPLINE CENTER FEED MANIFOLD
12 | 16 — 13
NTS

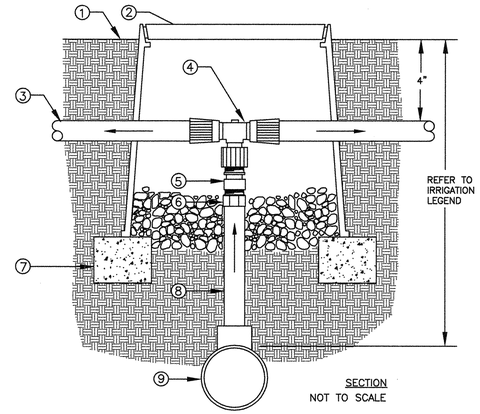


SECTION
NOT TO SCALE

1. FINISH GRADE
2. CARSON 708 OR APPROVED EQUAL. COLOR: BLACK.
3. DRIPLINE TUBING
4. TORO TRI–LOC TEE X 1/2" FPT ADAPTER OR APPROVED EQUAL
5. TORO 1/2" CHECK VALVE (PCV–500) OR APPROVED EQUAL
6. 1/2" SCH 40 MALE ADAPTER.
7. BRICK (1 OF 2)
8. 1/2" SCH 40 PVC (LENGTH AS REQUIRED)
9. PVC LATERAL LINE SUPPLY. MINIMUM SIZE TO BE 1" UNLESS SIZED DIFFERENTLY ON DRAWINGS. USE SCH 40 PVC 1"x1"x1/2" TEE OR 90° ELBOW.

## 3 DRIPLINE TO PVC CONNECTION
12 | 16 — 13
NTS

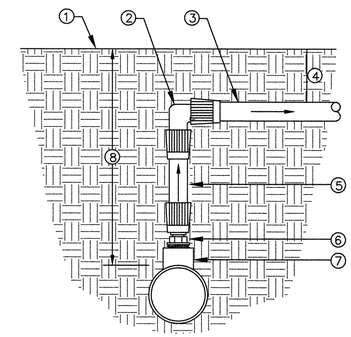

SECTION/ELEVATION
NOT TO SCALE

1. FINISH GRADE
2. TORO TRI–LOC ELBOW (TL–E) OR APPROVED EQUAL
3. DRIPLINE TUBING
4. DEPTH OF TUBING PER IRRIGATION LEGEND.
5. TORO BLUE STRIPE POLY TUBING (EHD1645) OR APPROVED EQUAL
6. TORO TRI–LOC MPT ADAPTER (TL–M50) OR APPROVED EQUAL
7. SCH 40 PVC TEE (SxSxT) WITH 1/2" FPT OUTLET.
8. DEPTH OF PVC LATERAL LINE PER IRRIGATION LEGEND

## 4 DRIPLINE MANIFOLD TO ELBOW CONNECTION
12 | 16 — 13
NTS

CONSTRUCTION DOCUMENTS

CAUTION: THIS PLAN MAY BE REDUCED 0 1" 2" ORIGINAL SCALE

PROJECT NO. A10081001

REFERENCES:
HORIZONTAL: NAD83(2011)
VERTICAL: NAVD88
PLANFILE 272–26

CAUTION:
CHECK TRACING FOR LATEST REVISIONS

| NO. | REVISIONS | DATE | REV'D | APP'D |
|---|---|---|---|---|
| | | | | |

DRAWN L. BLANCHARD
DESIGNED C. MITCHELL
CHECKED S. KENNEY
REG. ENGINEER NO. 5779
REG. ENGINEER NO.

PORT OF OAKLAND
530 WATER ST. OAKLAND, CALIFORNIA

MOTT MACDONALD

OAKLAND INTERNATIONAL AIRPORT
OAK RENTAL CAR CENTER IMPROVEMENTS
IRRIGATION DETAILS 3 OF 4

REGISTERED LANDSCAPE ARCHITECT
LEAH C. HAYGOOD
NO. 1595
EXP. 8/31/17
STATE OF CALIFORNIA

DATE: 01–09–17
SCALE: AS SHOWN
SHEET: 49 OF 53 SHEETS
16 AA–4193

PRINT DATE 01–18–17 16:10:57 S:\Projects\Mott MacDonald\Port of Oakland Auto Rental Center\CAD\Landscape\4193-49.dwg Printed by Simon

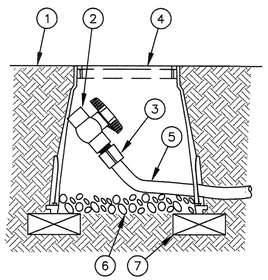


NOTE:
ALLOW A MINIMUM OF PVC HOSE IN VALVE BOX IN ORDER TO DIRECT FLUSHED WATER OUTSIDE VALVE BOX.

1. FINISH GRADE
2. 1/2" SCH 40 THREADED BALL VALVE.
3. 1/2" SCH 40 MALE ADAPTER.
4. 6" ROUND PLASTIC VALVE BOX.
5. 1" IPS PVC HOSE FROM EXHAUST HEADER.
6. PEA GRAVEL SUMP (6" DEEP).
7. BRICK (1 OF 2)

## 1 DRIPLINE-FLUSH POINT

12 | 17 — 13

NTS

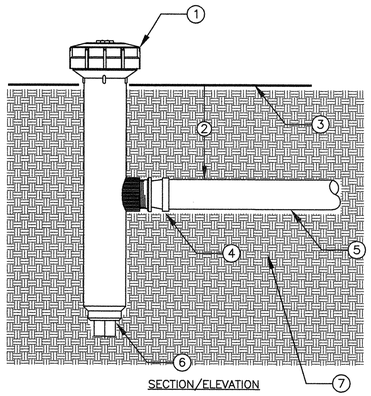


SECTION/ELEVATION

1. TORO 6" POP UP SPRINKLER WITH SIDE INLET (MODEL 570Z-6P-SI-PRX WITH 5' PRECISION NOZZLE (MODEL O-T-5-QP) TURNED COMPLETELY OFF WITH ADJUSTMENT SCREW OR APPROVED EQUAL. SPRINKLER SHALL OPERATE AS THE DRIPLINE INDICATOR. USE A MINIMUM OF ONE PER ZONE AND LOCATED AT END OF ZONE.
2. DEPTH OF DRIPLINE. REFER TO IRRIGATION LEGEND.
3. FINISH GRADE.
4. TORO TRI-LOC X 1/2" MPT ADAPTER (TL-M50) OR APPROVED EQUAL
5. DRIPLINE.
6. KEEP PLUG IN SPRINKLER. ONLY USE SIDE INLET.
7. SOIL BACKFILL.

## 2 DRIPLINE OPERATION INDICATOR

12 | 17 — 13

NTS

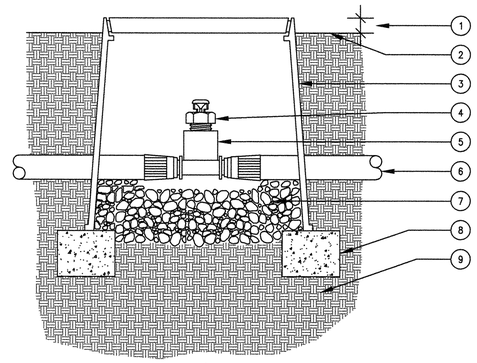


SECTION/ELEVATION

NOTE:
USE ONE AIR/RELIEF VALVE FOR EVERY 7 GPM PER ZONE. LOCATE AT HIGH POINTS.

1. 1" ABOVE FINISH GRADE.
2. FINISH GRADE.
3. 6" ROUND PLASTIC VALVE BOX. HEAT BRAND "AR" ON LID IN 1" HIGH CHARACTERS.
4. TORO DL2000 AIR/VACUUM RELIEF VALVE (YD-500-34) OR APPROVED EQUAL.
5. TORO TRI-LOC TEE X 1/2" FPT ADAPTER (TL-T-F50) OR APPROVED EQUAL
6. TORO DL2000 TUBING OR TORO BLUE STRIPE POLY TUBING EHD1645 AIR-RELIEF LATERAL OR APPROVED EQUAL.
7. PEA GRAVEL (4" DEEP).
8. BRICK SUPPORTS (2 COMMON BRICKS REQUIRED).
9. NATIVE SOIL PER SPECIFICATIONS.

## 3 AIR VACUUM RELIEF VALVE IN DRIPLINE

12 | 17 — 13

NTS

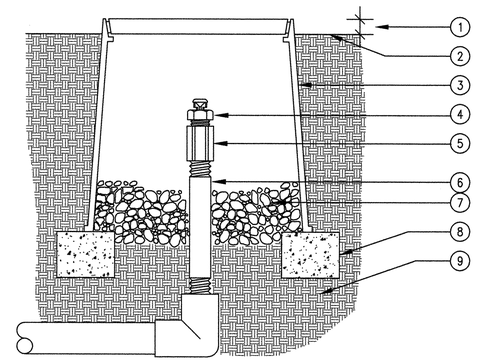


SECTION/ELEVATION

NOTE:
USE ONE AIR/RELIEF VALVE FOR EVERY 7 GPM PER ZONE. LOCATE AT HIGH POINTS.

1. 1" ABOVE FINISH GRADE.
2. FINISH GRADE.
3. 6" ROUND PLASTIC VALVE BOX. HEAT BRAND "AR" ON LID IN 1" HIGH CHARACTERS.
4. TORO DL2000 AIR/VACUUM RELIEF VALVE (YD-500-34) OR APPROVED EQUAL.
5. 1/2" SCH 40 PVC COUPLING (TxT)
6. 1/2" SCH 80 PVC NIPPLE (LENGTH AS REQUIRED).
7. PEA GRAVEL (4" DEEP).
8. BRICK SUPPORTS (2 COMMON BRICKS REQUIRED).
9. NATIVE SOIL PER SPECIFICATIONS.

## 4 AIR VACUUM RELIEF VALVE ON PVC ELL

12 | 17 — 13

NTS

CONSTRUCTION DOCUMENTS

CAUTION: THIS PLAN MAY BE REDUCED 0 1" 2" ORIGINAL SCALE

PROJECT NO. A10081001

REFERENCES:

HORIZONTAL: NAD83(2011)
VERTICAL: NAVD88
PLANFILE 272-26

CAUTION:
CHECK TRACING FOR LATEST REVISIONS

| NO. | REVISIONS | DATE | REV'D | APP'D |
|---|---|---|---|---|
| | | | | |

DRAWN L. BLANCHARD
DESIGNED C. MITCHELL
CHECKED S. KENNEY — REG. ENGINEER NO. 5779

PORT OF OAKLAND
530 WATER ST. OAKLAND, CALIFORNIA

MOTT MACDONALD

OAKLAND INTERNATIONAL AIRPORT

OAK RENTAL CAR CENTER IMPROVEMENTS

IRRIGATION DETAILS 4 OF 4

REGISTERED LANDSCAPE ARCHITECT — LEAH C. HAYGOOD — NO. 1595 — EXP. 8/31/17 — STATE OF CALIFORNIA

DATE: 01-09-17
SCALE: AS SHOWN
SHEET: 50 OF 53 SHEETS

17 | AA-4193

PRINT DATE 01-18-17 16:11:12 S:\Projects\Mott MacDonald\Port of Oakland Auto Rental Center\CAD\Landscape\4193-50.dwg Printed by Simon

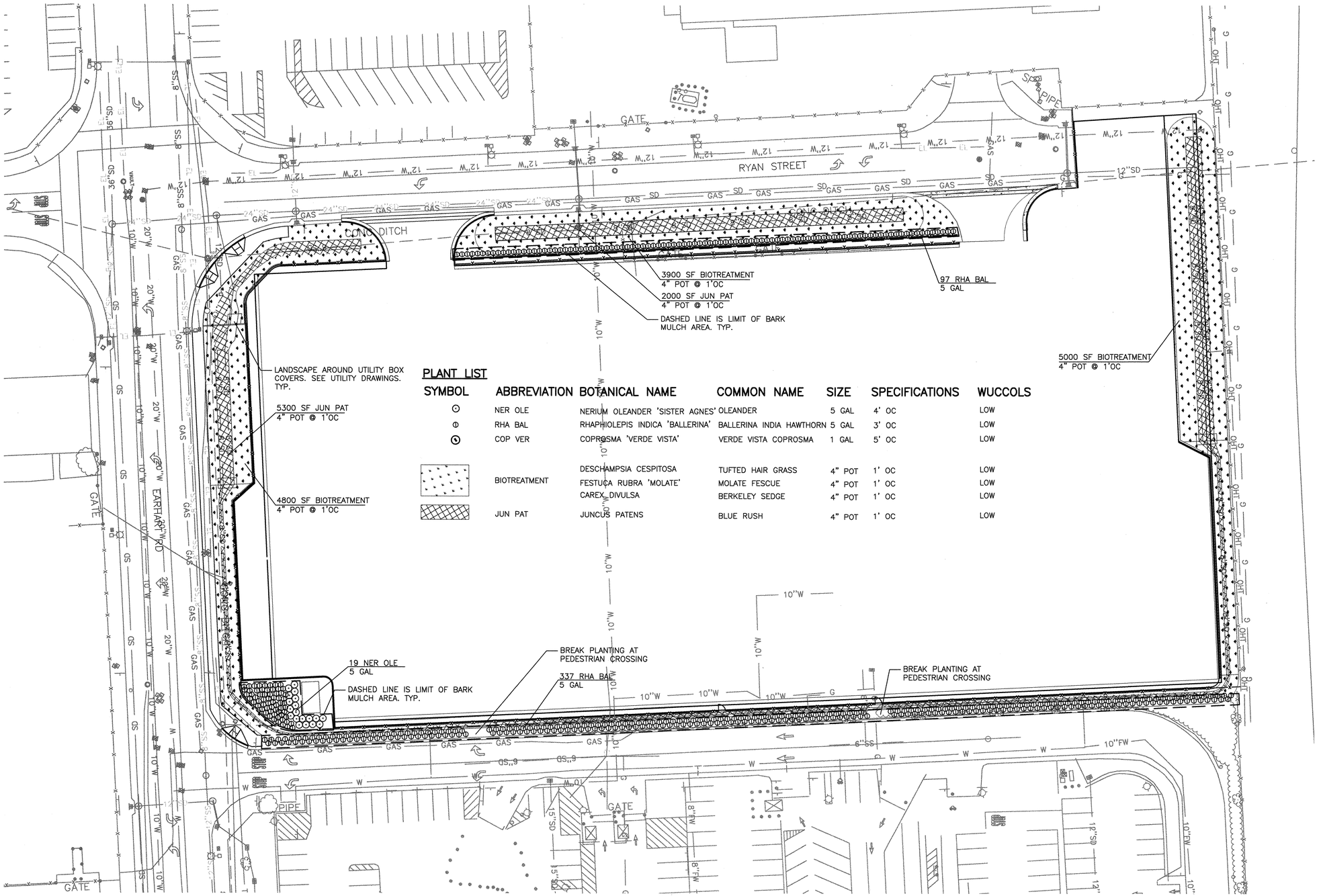


## PLANT LIST

| SYMBOL | ABBREVIATION | BOTANICAL NAME | COMMON NAME | SIZE | SPECIFICATIONS | WUCCOLS |
|---|---|---|---|---|---|---|
| ⊙ | NER OLE | NERIUM OLEANDER 'SISTER AGNES' | OLEANDER | 5 GAL | 4' OC | LOW |
| ⦶ | RHA BAL | RHAPHIOLEPIS INDICA 'BALLERINA' | BALLERINA INDIA HAWTHORN | 5 GAL | 3' OC | LOW |
| ⊙ | COP VER | COPROSMA 'VERDE VISTA' | VERDE VISTA COPROSMA | 1 GAL | 5' OC | LOW |
| | BIOTREATMENT | DESCHAMPSIA CESPITOSA | TUFTED HAIR GRASS | 4" POT | 1' OC | LOW |
| | | FESTUCA RUBRA 'MOLATE' | MOLATE FESCUE | 4" POT | 1' OC | LOW |
| | | CAREX DIVULSA | BERKELEY SEDGE | 4" POT | 1' OC | LOW |
| | JUN PAT | JUNCUS PATENS | BLUE RUSH | 4" POT | 1' OC | LOW |

## PLANTING NOTES

1. FINAL LOCATION OF ALL PLANTS IS TO BE APPROVED BY THE PORT ENGINEER PRIOR TO INSTALLATION. REQUEST DIRECTION FROM THE PORT ENGINEER IF PLANT LOCATIONS REQUIRE ADJUSTMENT DUE TO, BUT NOT NECESSARILY LIMITED TO THE FOLLOWING, UNDERGROUND OR ABOVE GROUND UTILITIES, STRUCTURES, SIGHT DISTANCES AND COMPLIANCE WITH UTILITY AND CITY REQUIREMENTS FOR SETBACKS AND RESTRICTIONS. THESE REQUESTS TO OCCUR PRIOR TO IRRIGATION AND PLANT INSTALLATION. PORT ENGINEER'S APPROVAL IS REQUIRED FOR ALL ADJUSTMENTS PRIOR TO INSTALLATION. CONTRACTOR IS TO INCLUDE ALL COSTS ASSOCIATED WITH ADJUSTMENTS IN IRRIGATION AND/OR PLANT LOCATIONS IN THE CONTRACT PRICES PAID FOR THE VARIOUS ITEMS OF WORK AND NO ADDITIONAL COMPENSATION WILL BE ALLOWED THEREFOR.
2. EXISTING PLANTS TO REMAIN THAT ARE DAMAGED, DIE AND/OR DIE–BACK AS A RESULT OF THIS CONSTRUCTION WORK ARE TO BE REPLACED AT THE CONTRACTOR'S EXPENSE AND TO THE SATISFACTION OF THE PORT ENGINEER. THE SIZE AND VALUE OF REPLACEMENT TREES AND SHRUBS WILL BE DETERMINED BY THE PORT ENGINEER BASED ON THE "GUIDE FOR PLANT APPRAISAL" CURRENT EDITION, OR SIMILAR REVISED PLANT EVALUATION HANDBOOK PUBLISHED BY THE INTERNATIONAL SOCIETY OF ARBORICULTURE. INSTALLATION AND GUARANTEE OF REPLACEMENT PLANTING IS TO CONFORM TO THE CONTRACT DOCUMENTS.
3. COORDINATE THE REMOVAL OF EXISTING PLANTS, IRRIGATION AND OTHER OBSTRUCTIONS IN AREAS WHERE NEW PLANTING IS TO BE INSTALLED WITH THE PORT ENGINEER.

N

30' 0 30' 60'
SCALE: 1" = 30'–0"

REGISTERED LANDSCAPE ARCHITECT
LEAH C. HAYGOOD
NO. 1595
EXP. 8/31/17
STATE OF CALIFORNIA

CONSTRUCTION DOCUMENTS

CAUTION: THIS PLAN MAY BE REDUCED 0 1" 2" ORIGINAL SCALE

PROJECT NO. A10081001

REFERENCES:
HORIZONTAL: NAD83(2011)
VERTICAL: NAVD88
PLANFILE 272–26

CAUTION:
CHECK TRACING FOR LATEST REVISIONS

| NO. | REVISIONS | DATE | REV'D | APP'D |
|---|---|---|---|---|
| | | | | |

DRAWN S. KENNEY
DESIGNED S. KENNEY 5779 REG. ENGINEER NO.
CHECKED L. HAYGOOD 1595 REG. ENGINEER NO.

PORT OF OAKLAND
530 WATER ST. OAKLAND, CALIFORNIA

MOTT MACDONALD

OAKLAND INTERNATIONAL AIRPORT
OAK RENTAL CAR CENTER IMPROVEMENTS
PLANTING 1 OF 2

DATE: 01–09–17
SCALE: AS SHOWN
SHEET: 51 OF 53 SHEETS
P1 AA–4193

PRINT DATE 02–03–17 15:43:25 S:\Projects\Mott MacDonald\Port of Oakland Auto Rental Center\CAD\Landscape\4193-51.dwg Printed by: Simon

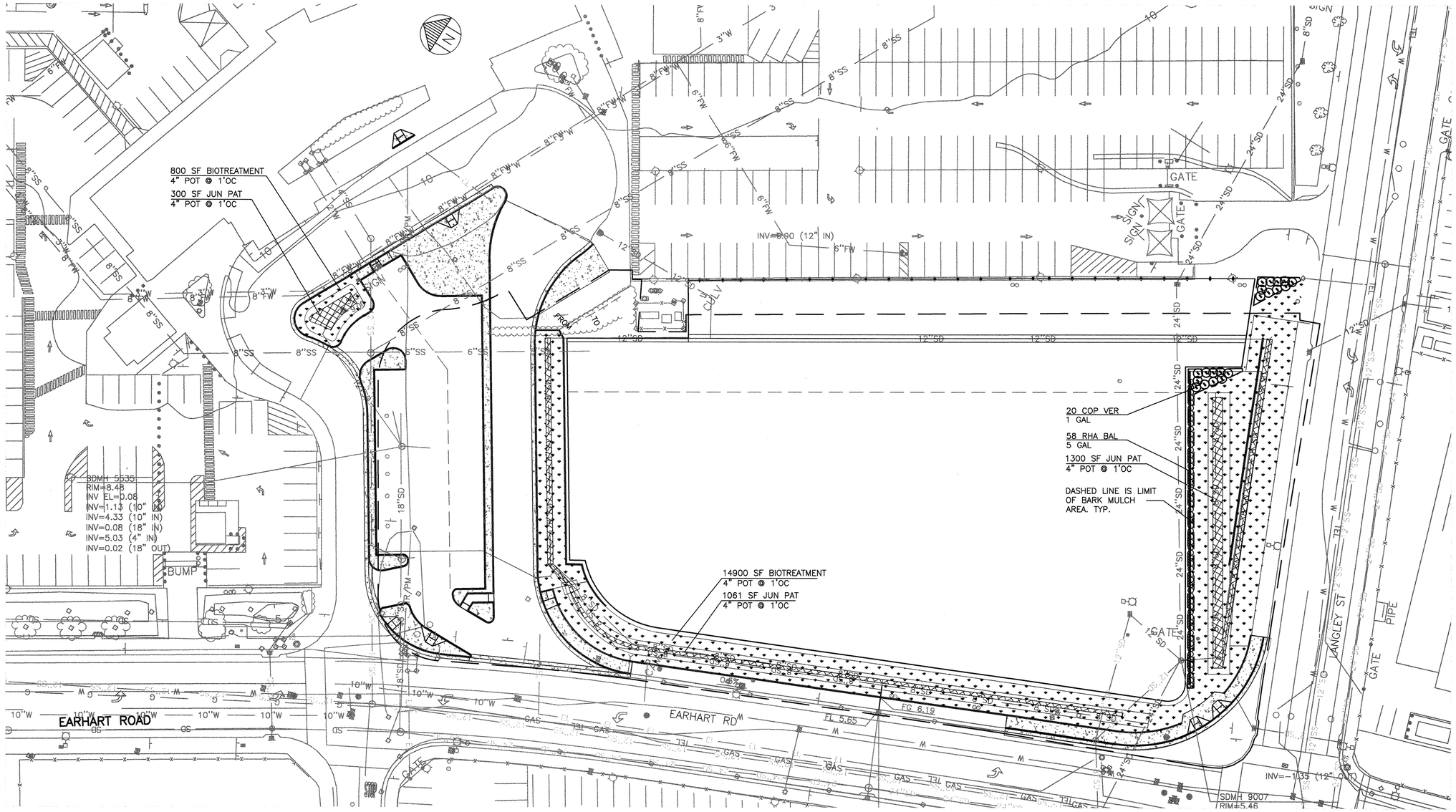


## PLANTING NOTES

1. SEE SPECIFICATIONS FOR ADDITIONAL INFORMATION.
2. SEE SHEET P1 FOR PLANTING NOTES AND PLANTING LIST

30' 0 30' 60'
SCALE: 1" = 30'-0"

# CONSTRUCTION DOCUMENTS

CAUTION: THIS PLAN MAY BE REDUCED 0 1" 2" ORIGINAL SCALE

REGISTERED LANDSCAPE ARCHITECT
LEWIS C. HAYGOOD
NO. 1595
EXP. 8/31/17
STATE OF CALIFORNIA

PROJECT NO. A10081001

REFERENCES:
HORIZONTAL: NAD83(2011)
VERTICAL: NAVD88
PLANFILE 272-26

CAUTION:
CHECK TRACING FOR LATEST REVISIONS

| NO. | REVISIONS | DATE | REV'D | APP'D |
|---|---|---|---|---|
| | | | | |

DRAWN S.KENNEY
DESIGNED S. KENNEY 5779 REG. ENGINEER NO.
CHECKED L. HAYGOOD 1595 REG. ENGINEER NO.

PORT OF OAKLAND
530 WATER ST. OAKLAND, CALIFORNIA

MOTT MACDONALD

OAKLAND INTERNATIONAL AIRPORT
OAK RENTAL CAR CENTER IMPROVEMENTS
PLANTING 2 OF 2

DATE: 01-09-17
SCALE: AS SHOWN
SHEET: 52 OF 53 SHEETS
P2 AA-4193

PRINT DATE 01-18-17 16:13:00 S:\Projects\Mott MacDonald\Port of Oakland Auto Rental Center\CAD\Landscape\4193-52.dwg Printed by Simon

NOTE: DO NOT PLACE MULCH LAYER WITHIN BIOSWALE OR BIORETENTION AREAS

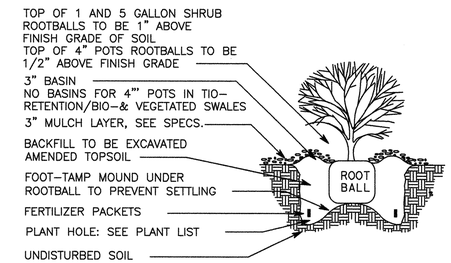


1 P1 P3 P2

## SHRUB PLANTING DETAIL

NTS

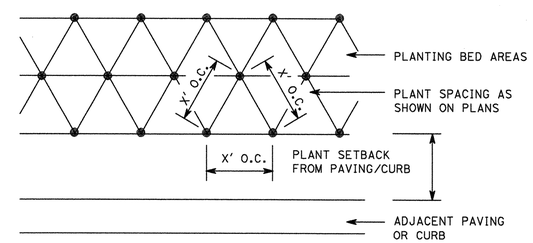


NOTES:

1. INSTALL PLANTS ON TRIANGULAR SPACING. ROWS TO BE PARALLEL TO ADJACENT PAVING OR CURB. RADIUS ROWS AT CURVES.
2. ON CENTER SPACING PER PLANS. LOCATE PLANTS CLOSER TOGETHER TO FILL IN TAPERED SECTIONS OF PLANTING AREAS.

2 P1 P3 P2

## TRIANGULAR PLANT SPACING

NTS

CONSTRUCTION DOCUMENTS

CAUTION: THIS PLAN MAY BE REDUCED 0 1" 2" ORIGINAL SCALE

REGISTERED LANDSCAPE ARCHITECT LEAH C. HAYGOOD NO. 1595 EXP. 8/31/17 STATE OF CALIFORNIA

PROJECT NO. A10081001

REFERENCES:

HORIZONTAL: NAD83(2011)
VERTICAL: NAVD88
PLANFILE 272-26

CAUTION:
CHECK TRACING FOR LATEST REVISIONS

| NO. | REVISIONS | DATE | REV'D | APP'D |
|---|---|---|---|---|
| | | | | |

DRAWN S. KENNEY
DESIGNED S. KENNEY 5779 REG. ENGINEER NO.
CHECKED L. HAYGOOD 1595 REG. ENGINEER NO.

PORT OF OAKLAND
530 WATER ST. OAKLAND, CALIFORNIA

MOTT MACDONALD

OAKLAND INTERNATIONAL AIRPORT
OAK RENTAL CAR CENTER IMPROVEMENTS
PLANTING DETAILS

DATE: 01-09-17
SCALE: AS SHOWN
SHEET: 53 OF 53 SHEETS
P3 AA-4193

PRINT DATE 01-18-17 16:19:04 S:\Projects\Mott MacDonald\Port of Oakland Auto Rental Center\CAD\Landscape\4193-53.dwg Printed by Simon