Port of Oakland Development Permit Application Permit No:_____

APPLICANT TO COMPLETE ITEMS WITHIN BOX ONLY and SIGN BOTTOM OF 2nd PAGE

Project Address: Adjacent to 7901 Oakport Street APN: (Nearest) 042-4435-4-10

Applicant: ExteNet Systems (California) LLC

Contact: Telephone / E-mail: Ana Gomez (913) 458-9148 / GomezAbarcaA@bv.com

Project Sponsor (Property Owner): City of Oakland (Thang Nguyen)

Contact: Telephone / E-mail: (510) 238-6363 / tnguyen@oaklandnet.com

Tenant Name: ExteNet Systems (California) LLC x Applicant ___Owner

Describe Use: Existing metal street light in public right-of-way

Type of Project (check all that apply): ___New Construction x Remodel ___Demolition

x Exterior ___Interior ___Site Utilities ___HazMat

Size of Property (sf): Site: _____ Existing Improvements: _____ Project: _____

Proposed Improvements (sf): _____ Parking; existing ____ proposed _____

Project Description: Installation of wireless facility in public right-of-way at existing pole location as depicted in the attached drawings.

Valuation: $ 10,000

Submittals / Approvals (X indicates required):

X **Drawings/Project Description-** Applications must include drawings and a written description of the proposed work.

___ **Airport (OAK) Projects-** Applications for work at OAK must include the completed form attached.

___ **Property Owner Verification-**Applicant must submit a "Letter of Agency" signed by the property owner if requested, except for Port of Oakland property, to verify authorization to represent the property owner.

___ **Initial Study Checklist for California Environmental Quality Act (CEQA) Compliance-** A CEQA determination by Port staff is required for each permit application. If Categorically Exempt (CatEx), no further analysis is required. If not CatEx, an Initial Study Checklist must be prepared, at the applicant's expense, to evaluate potential impacts and to determine the level of CEQA review.

___ **General Plan Conformity Determination-** A conformity determination may be required if the project proposes a new use. Port staff will perform the required analysis.

___ **Height Review - FAA 7460-** Height limits in the vicinity of the Oakland International Airport (OAK) are based on FAA flight clearances. The applicant will be required to file a Form 7460 if the proposal includes increased structure height. Port approval will be subject to the findings of the FAA.

___ **Exterior Lighting Review-** New or replacement exterior lighting must comply with the Port's Exterior Lighting Policy. Lighting details must be submitted to demonstrate compliance.

___ **Storm Water Permits-** Projects causing ≥1 acre of land disturbance require a State Construction General Permit and shall submit a Waste Discharge ID as proof of coverage. Projects creating/replacing ≥2500 square feet of impervious surface may need to comply with the Port's Municipal Stormwater Permit and develop a Post Construction Stormwater Management Plan.

___ **Private Sewer Lateral (PSL) Permit-** Projects exceeding $100,000 valuation are subject to compliance with the EBMUD's PSL ordinance, enforced through the City of Oakland Building Permit. Projects on Port property may be subject to separate approval of repair plans by the Port.

___ **Maritime and Aviation Project Labor Agreement (MAPLA)-** Projects by Port Maritime and Aviation tenants must comply with MAPLA if they exceed the cost threshold of $150,000. Sign and submit the attached acknowledgement letter if cost exceeds threshold.

___ **Utilities-** The Port is the utility provider for some of the property under its land use jurisdiction. Such properties will be subject to additional review relating to utility use and equipment.

X **Fees-** Fees will be determined upon evaluation of the Application based on the Engineering Master Fee Schedule.

Port of Oakland Development Permit Application (p2) Permit No:_____

Agreement:

By the signature below, the Applicant agrees to comply with the standard conditions listed on this page, and with any specific conditions delineated at the time of approval. The Applicant certifies that s/he has permission from the property owner to carry out the work described herein. If the Applicant is not the Contractor, the Applicant hereby certifies that the Contractor will be directed to comply with all the conditions set forth in this permit approval. Applicant certifies that the property owner authorizes Applicant on his/her behalf to submit and further agrees to be bound by the material representations herein. These representations are made to induce the Port to approve this application and the Port approval of this application is made in reliance on the foregoing representations.

Standard Conditions of Approval:

1. All conditions of approval shall be printed on the final permit set of plans.
2. The project shall conform to the Port-stamped approved plans, including the conditions of approval, unless otherwise approved by the Port. The applicant is responsible for including all details agreed upon, or conditions made by the Port, during the approval process. Failure to include any such details will not exempt the applicant from including them at a later time. The applicant is responsible for obtaining approval from the Port for any changes prior to construction.
3. The use shall be fully described on the plans and is deemed approved by the Port approval stamp. Any modifications or clarifications will be included in the Specific Conditions. Any changes from the approved plans must be approved in writing by the Port.
4. The Applicant shall comply with the policies and standards for the Land Use and Development Code (LUDC) for the Oakland Airport Business Park (Business Park only).
5. The Applicant shall confirm that an aviation easement in favor of Oakland International Airport in a form approved by the Port Attorney has been recorded on the subject property. If not, the applicant shall grant and record an aviation easement. (Business Park only.)
6. The Applicant shall make improvements for sidewalk(s) as required. Such improvements shall be included in the approved plans, unless otherwise specified in the Specific Conditions. (Business Park only.)
7. The Applicant shall meet all conditions and requirements of all outside agencies having jurisdiction over the project, including but not limited to: the City of Oakland, Federal Aviation Administration, Regional Water Quality Control Board, Airport Land Use Commission, Alameda County Health Department, and State Lands Commission. The applicant shall report any conflicts with Port requirements to the Port prior to construction. Any such conflicts must be resolved by the applicant to the satisfaction of the Port and the outside agency involved.
8. The Applicant shall comply with the requirements of all environmental documents prepared under the California Environmental Quality Act applicable to the subject project including mitigation and monitoring requirements approved for the Development Permit.
9. The Applicant shall comply with the current version of the Port of Oakland Exterior Lighting Policy.
10. The Applicant shall comply with applicable storm water quality requirements including Low Impact Development site design.
11. The Applicant shall provide as-built drawings at the conclusion of any project on Port-owned property.
12. The applicant shall defend, indemnify, and hold harmless the Port and its agents, officers, and employees from any claim, action or proceeding against the Port or its agents, officers or employees to attack, set aside, void, annul, or invalidate any Port approval concerning the subject project provided that the Port has promptly notified the Applicant of any such claim, action or proceeding and cooperates in the defense. Counsel retained in such defense shall be subject to the mutual approval of the Applicant and the Port. The Applicant shall reimburse the Port for its reasonable attorney and consultant fees incurred in such defense including amounts attributable to the Port Attorney's legal services.

Applicant Signature: Ana Gomez (Black & Veatch) for ExteNet Systems (California) LLC Date: 10/21/16

Port Approval:

The signature below certifies that the Port of Oakland has approved the project, and the applicant is free to start work. This page serves as the applicant's approved permit.

Approved: _____ Date: _____ ☐ Additional Conditions Attached

Port of Oakland Development Permit Application - Instructions

Permit #: Port will assign.

Information Box, Top of Page 1:

Project Address: Location of the proposed work by street address, the Alameda County Assessor's Parcel Number (APN) should be included and will be required for City of Oakland Building Permit.

Applicant: Name and contact information for the person who will be the primary contact during the approval process.

Project Sponsor (Property Owner): Name and contact information for the person who owns the property (or representative of the business entity that owns the property.) If a representative, include the official owner name (i.e. Joe Marsh for "Port of Oakland")

Tenant Name: Provide the name of the business or person that will occupy the space, if known. Check if they are the owner or the applicant (may be neither).

Describe Use: Provide a brief but concise description of the activities intended by the tenant.

Type of Project (check all that apply): Check one of "New Construction" or "Remodel". "Demolition" is the removal of more than 50% of the floor area of the existing building. Indicate if work will be inside and/or outside the building. "Site Utilities" are facilities and connections outside the building envelope. HazMat are any hazardous materials that are being removed or otherwise mitigated inside or outside the building, including asbestos or lead paint removal, contaminated soil handling, etc.

Size of Property (sf): List the size of the lot, the existing building(s), and the construction area in square feet.

Project Description: Provide a brief description of the construction and modifications proposed for the site and buildings. A more complete description should be filed with the application.

Valuation: This should be an estimate to the nearest $1000 of the materials and labor for construction work proposed for the permit. This is only used by the Port to gauge the size and scope of the work, the fee is not based on this number.

Submittals/Approvals, Bottom of Page 1:

Port staff will complete this section after evaluating the permit application and return a copy to the applicant. This could be done during an initial meeting with the applicant, by appointment, or the applicant can submit the application by mail, e-mail, or drop-off in person. The Port can usually do an initial evaluation within 48 hours of submittal.

Supplemental materials to describe the project and a permit fee are always required for the application. Further information can be found at our website (http://www.portofoakland.com/business/bids-rfps/bid-engineering/permits/), or by contacting the Port Permit Coordinator (jmarsh@portoakland.com).

The Port Development Permit is a land use approval that takes the place of a City of Oakland Zoning permit in the Port Area. For this approval, the applicant must include materials that describe all parts of the project, including details specific to the proposed use and any exterior modifications. The applicant must show how the project may affect neighboring uses and views from the public ways. Traditional drawing sets are preferred though not required. It is understood that the Port approval is discretionary, and that the applicant may not want to spend the time and resources to fully detail the project as will be required for the City of Oakland building permit (a ministerial action.) The Port will review and approve any drawings for City building permits prior to their submittal for compliance with the Port's development permit.

Other Submittals/Approvals listed include a description. Further assistance, including additional materials, will be provided for these if required.

Agreement, Top of Page 2:

The applicant agrees to follow the conditions of the permit and convey those conditions to the property owner and contractor, who will also be bound by the permit conditions.

Standard Conditions of Approval, Middle of Page 2:

These are standard conditions that apply to all projects, except where noted otherwise.

Applicant Signature, Bottom of Page 2:

The applicant must sign the application, and by doing so agrees to the conditions set forth herein.

Port Approval, Bottom of Page 2:

The Port will sign the application once approved to provide a record for the applicant. Drawings and other documents submitted for permits with other agencies must be stamped and signed separately.

NW-CA-SANFRNMC
06295B

ADJACENT TO (IN PROW)
7901 OAKPORT STREET
OAKLAND, CA 94621

LOCAL MAP

NO SCALE

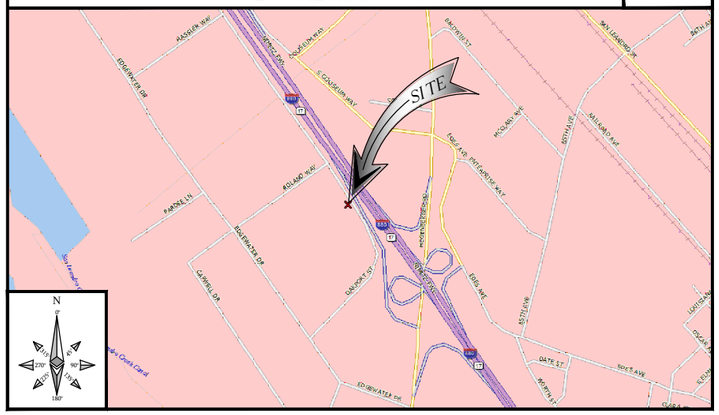

SITE MAP

NO SCALE

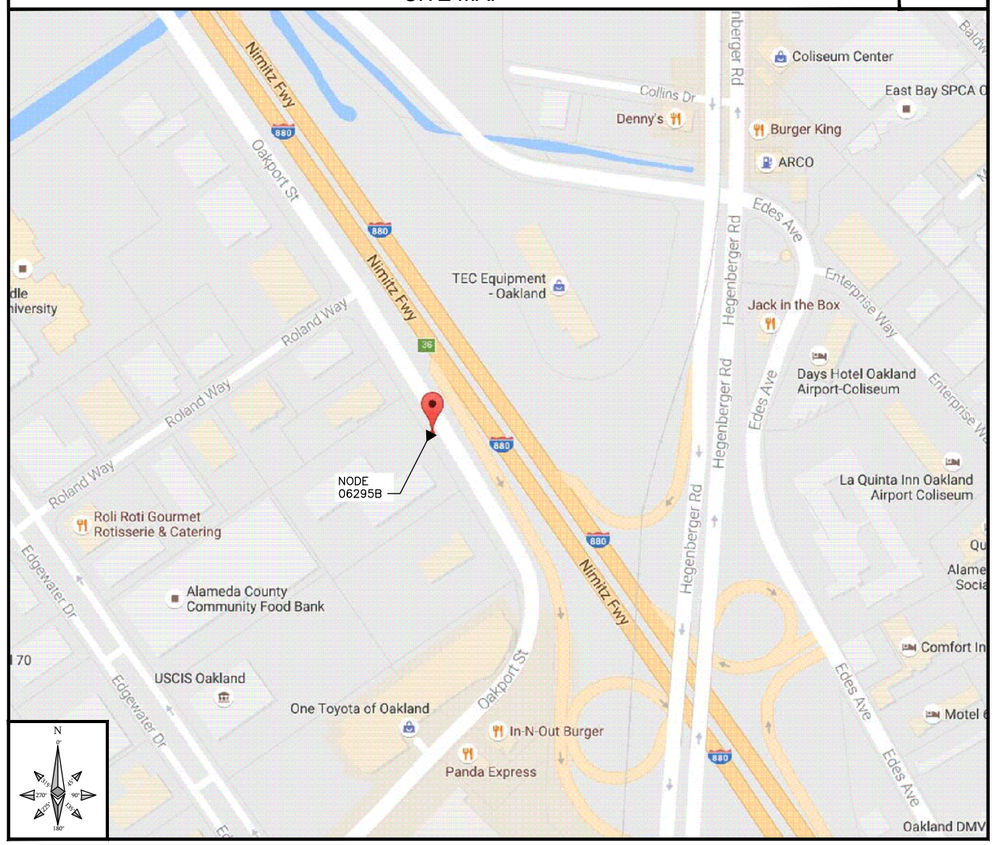

SHEET INDEX

SHEET NO:	SHEET TITLE
T–1	TITLE SHEET
GN–1	GENERAL NOTES AND LEGEND
C–1	OVERALL SITE PLAN
C–2	UTILITY POLE ELEVATIONS AND RISER DETAILS
C–3	EQUIPMENT DETAILS
C–4	EQUIPMENT DETAILS
C–5	ELECTRICAL AND GROUNDING DETAILS

IF USING 11"X17" PLOT, DRAWINGS WILL BE HALF SCALE

SUBCONTRACTOR SHALL VERIFY ALL PLANS & EXISTING DIMENSIONS & CONDITIONS ON THE JOB SITE & SHALL IMMEDIATELY NOTIFY THE ENGINEER IN WRITING OF ANY DISCREPANCIES BEFORE PROCEEDING WITH THE WORK OR BE RESPONSIBLE FOR SAME

PROJECT INFORMATION

POLE OWNER

OWNER: CITY OF OAKLAND

ADDRESS: 7101 EDGEWATER DRIVE
OAKLAND, CA 94621

PHONE: –

APPLICANT

COMPANY: EXTENET SYSTEMS (CALIFORNIA), LLC.

CONTACT: MATTHEW YERGOVICH

ADDRESS: 2000 CROW CANYON PLACE, SUITE 210
SAN RAMON, CA
94583

PHONE: (415) 596–3474

E–MAIL: MYERGOVICH@EXTENETSYSTEMS.COM

AGENT

COMPANY: BLACK & VEATCH

CONTACT: ANA GOMEZ

ADDRESS: 2999 OAK ROAD,
SUITE 490
WALNUT CREEK,
CA 94597

PHONE: (913) 458–9148

E–MAIL: GOMEZABARCAA@BV.COM

ENGINEER

COMPANY: BLACK & VEATCH

ENGINEER: AARON EVANS

PHONE: (952) 896–0751

E–MAIL: EVANSRA@BV.COM

PROJECT DATA

LATITUDE:	37.742801°
LONGITUDE:	–122.199079°
POLE #:	A5570
ELEVATION:	NA
ZONING JURISDICTION:	CITY OF OAKLAND
ZONING DISTRICT:	D–CO–3
NEAREAST A.P.N.:	42–4435–4–10
OCCUPANCY:	U, UNMANNED
CONSTRUCTION TYPE:	ATTACHMENTS TO A METAL/STREET LIGHT POLE
TITLE 24 REQUIREMENTS:	FACILITY IS UNMANNED AND NOT FOR HUMAN HABITATION. THIS PROJECT IS EXEMPT.

CODE COMPLIANCE

ALL WORK AND MATERIALS SHALL BE PERFORMED AND INSTALLED IN ACCORDANCE WITH THE CURRENT EDITIONS OF THE FOLLOWING CODES AS ADOPTED BY THE LOCAL GOVERNING AUTHORITIES (AS APPLICABLE). NOTHING IN THESE PLANS IS TO BE CONSTRUCTED TO PERMIT WORK NOT CONFORMING TO THESE CODES.

1: IBC – 2012
2: CALIFORNIA BUILDING STANDARDS CODE – 2013
3: CALIFORNIA GENERAL ORDER 95
4: CALIFORNIA MECHANICAL CODE 2013
5: CALIFORNIA PLUMBING CODE 2013
6: CALIFORNIA ELECTRICAL CODE 2013
7: CITY AND/OR COUNTY ORDINANCES
8: 2012 INTERNATIONAL FIRE CODE
9: BUILDING OFFICIALS AND CODE ADMINISTRATORS (BOCA)
*EFFECTIVE UNTIL JANUARY 1ST, 2017

PROJECT DESCRIPTION

THESE DRAWINGS DEPICT THE INSTALLATION OF A WIRELESS TELECOMMUNICATIONS NODE IN THE PUBLIC RIGHT OF WAY.

HARDWARE AND ANCILLARY EQUIPMENT TO BE INSTALLED AS DESCRIBED HEREIN.

GENERAL PROJECT NOTES

1. PRIOR TO SUBMITTING A BID, THE CONTRACTOR SHALL FAMILIARIZE HIMSELF/HERSELF WITH THE SCOPE OF WORK AND ALL CONDITIONS AFFECTING THE NEW PROJECT.
2. CONTRACTOR SHALL VERIFY ALL FIELD CONDITIONS AND DIMENSIONS OF THE JOB SITE AND CONFIRM THAT WORK AS INDICATED ON THESE CONSTRUCTION DOCUMENTS CAN BE ACCOMPLISHED AS SHOWN PRIOR TO COMMENCEMENT OF ANY WORK.
3. ALL FIELD MODIFICATIONS BEFORE, DURING OR AFTER CONSTRUCTION SHALL BE APPROVED IN WRITING BY AN EXTENET SYSTEMS REPRESENTATIVE.
4. INSTALL ALL EQUIPMENT AND MATERIALS PER THE MANUFACTURER'S RECOMMENDATIONS, UNLESS INDICATED OTHERWISE.
5. NOTIFY EXTENET SYSTEMS, IN WRITING, OF ANY MAJOR DISCREPANCIES REGARDING THE CONTRACT DOCUMENTS, EXISTING CONDITIONS, AND DESIGN INTENT. THE CONTRACTOR SHALL BE RESPONSIBLE FOR OBTAINING CLARIFICATIONS FROM AN EXTENET SYSTEMS REPRESENTATIVE, AND ADJUSTING THE BID ACCORDINGLY.
6. CONTRACTOR SHALL BE SOLELY RESPONSIBLE FOR ALL CONSTRUCTION MEANS, METHODS, TECHNIQUES, SEQUENCES AND PROCEDURES OF THE WORK UNDER THE CONTRACT.
7. CONTRACTOR SHALL PROTECT ALL EXISTING IMPROVEMENTS AND FINISHES THAT ARE TO REMAIN. CONTRACTOR SHALL REPAIR ANY DAMAGE THAT MAY OCCUR DURING THE CONSTRUCTION TO THE SATISFACTION OF AN EXTENET SYSTEMS REPRESENTATIVE.
8. CONTRACTOR PLANS TO ILLUSTRATE THE AS–BUILT CONDITION OF THE SITE. FOLLOWING THE FINAL INSPECTION BY EXTENET OR TMOBILE, THE CONTRACTOR SHALL PROVIDE EXTENET SYSTEMS WITH ONE COPY OF ALL RED–LINED DRAWINGS.
9. VERIFY ALL FINAL EQUIPMENT WITH AN EXTENET SYSTEMS REPRESENTATIVE. ALL EQUIPMENT LAYOUT, SPECS, PERFORMANCE INSTALLATION AND THEIR FINAL LOCATION ARE TO BE APPROVED BY EXTENET SYSTEMS. THE CONTRACTOR SHALL BE RESPONSIBLE FOR COORDINATING HIS/HER WORK WITH THE WORK AND CLEARANCES REQUIRED BY OTHERS RELATED TO SAID INSTALLATIONS.

UNDERGROUND SERVICE ALERT

UTILITIES PROTECTION CENTER, INC.
811

48 HOURS BEFORE YOU DIG

extenet SYSTEMS mConnectivity Everywhere

INTERNAL REVIEW	
CONSTRUCTION SIGNATURE	DATE
RF SIGNATURE	DATE
REAL ESTATE SIGNATURE	DATE

BLACK & VEATCH

BLACK & VEATCH CORPORATION
2999 OAK ROAD
SUITE 490
WALNUT CREEK, CA 94597

THESE DRAWINGS ARE COPYRIGHTED AND ARE THE PROPERTY OF BLACK & VEATCH; PRODUCED SOLELY FOR THE USE OF OUR CLIENT. ANY REPRODUCTION OR USE OF THE INFORMATION CONTAINED WITHIN SAID DRAWINGS IS PROHIBITED WITHOUT WRITTEN CONSENT BY BLACK & VEATCH.

PROJECT NO.	DRAWN BY	CHECKED BY
192417.9505	MPD	GAC

REV	DATE	DESCRIPTION
D	09/23/16	ISSUED FOR REVIEW
C	09/13/16	CLIENT COMMENTS
B	09/09/16	ISSUED FOR REVIEW
A	09/07/16	ISSUED FOR REVIEW

PRELIMINARY

IT IS A VIOLATION OF LAW FOR ANY PERSON, UNLESS THEY ARE ACTING UNDER THE DIRECTION OF A LICENSED PROFESSIONAL ENGINEER, TO ALTER THIS DOCUMENT.

EXTENET SYSTEMS (CA) LLC
2000 CROW CANYON PLACE
SUITE 210
SAN RAMON, CA 94583

SITE ADDRESS

ADJACENT TO (IN PROW)
7901 OAKPORT STREET
OAKLAND, CA 94621

SHEET TITLE

TITLE SHEET

SHEET NUMBER

T-1

GENERAL NOTES

1. THESE NOTES SHALL BE CONSIDERED A PART OF THE WRITTEN SPECIFICATIONS, CONTRACT AND CONSTRUCTION DOCUMENTS.
2. THE WORK SHALL INCLUDE FURNISHING MATERIALS, EQUIPMENT, APPURTENANCES, AND LABOR NECESSARY TO COMPLETE ALL INSTALLATIONS AS INDICATED ON THESE PLANS AND IN THE CONTRACT DOCUMENTS.
3. PRIOR TO THE SUBMISSION OF BIDS, THE CONTRACTOR(S) SHALL VISIT THE JOB SITE(S) AND BE RESPONSIBLE FOR ALL CONTRACT DOCUMENTS, FIELD CONDITIONS AND DIMENSIONS, AND CONFIRM THAT THE WORK MAY BE ACCOMPLISHED PER THE CONTRACT DOCUMENTS. ANY DISCREPANCIES ARE TO BE BROUGHT TO THE ATTENTION OF THE IMPLEMENTATION ENGINEER AND ARCHITECT/ENGINEER PRIOR TO BID SUBMITTAL.
4. THE CONTRACTOR SHALL RECEIVE WRITTEN AUTHORIZATION TO PROCEED ON ANY WORK NOT CLEARLY DEFINED OR IDENTIFIED IN THE CONTRACT AND CONSTRUCTION DOCUMENTS BEFORE STARTING ANY WORK.
5. ALL WORK PERFORMED AND MATERIALS INSTALLED SHALL BE IN STRICT ACCORDANCE WITH ALL APPLICABLE CODES, REGULATIONS, AND ORDINANCES, INCLUDING APPLICABLE MUNICIPAL AND UTILITY COMPANY SPECIFICATIONS.
6. THE CONTRACTOR SHALL INSTALL ALL EQUIPMENT AND MATERIALS IN ACCORDANCE WITH MANUFACTURER RECOMMENDATIONS. IF THESE RECOMMENDATIONS ARE IN CONFLICT WITH THE CONTRACT AND CONSTRUCTION DOCUMENTS AND/OR APPLICABLE CODES OR REGULATIONS, REVIEW AND RESOLVE THE CONFLICT WITH DIRECTION FROM THE IMPLEMENTATION ENGINEER AND ARCHITECT/ENGINEER PRIOR TO PROCEEDING.
7. THE CONTRACTOR SHALL BE SOLELY RESPONSIBLE FOR ALL CONSTRUCTION MEANS, METHODS, TECHNIQUES, SEQUENCES, AND PROCEDURES AND FOR COORDINATION OF ALL PORTIONS OF THE WORK UNDER THE CONTRACT INCLUDING CONTACT AND COORDINATION WITH THE IMPLEMENTATION ENGINEER AND WITH THE AUTHORIZED REPRESENTATIVE OF ANY OUTSIDE POLE OR PROPERTY OWNER.
8. THE CONTRACTOR SHALL MAKE NECESSARY PROVISIONS TO PROTECT EXISTING IMPROVEMENTS, INCLUDING BUT NOT LIMITED TO PAVING, CURBS, VEGETATION, GALVANIZED SURFACE OR OTHER EXISTING ELEMENTS AND UPON COMPLETION OF THE WORK, REPAIR ANY DAMAGE THAT OCCURRED DURING CONSTRUCTION TO THE SATISFACTION OF EXTENET.
9. CONTRACTOR IS TO KEEP THE GENERAL AREA CLEAN, HAZARD FREE, AND DISPOSE OF ALL DIRT, DEBRIS, RUBBISH, AND REMOVE EQUIPMENT NOT SPECIFIED AS REMAINING ON THE PROPERTY. LEAVE PREMISES IN CLEAN CONDITION DAILY.
10. PLANS ARE INTENDED TO BE DIAGRAMMATIC ONLY AND SHOULD NOT BE SCALED UNLESS OTHERWISE NOTED. RELY ONLY ON ANNOTATED DIMENSIONS AND REQUEST INFORMATION IF ADDITIONAL DIMENSIONS ARE REQUIRED.
11. THE EXISTENCE AND LOCATION OF UTILITIES AND OTHER AGENCY'S FACILITIES WERE OBTAINED BY A SEARCH OF AVAILABLE RECORDS. OTHER FACILITIES MAY EXIST. CONTRACTOR SHALL VERIFY LOCATIONS PRIOR TO START OF CONSTRUCTION AND USE EXTREME CARE AND PROTECTIVE MEASURES TO PREVENT DAMAGE TO THESE FACILITIES. CONTRACTOR IS RESPONSIBLE FOR THE PROTECTION OF UTILITIES OR OTHER AGENCY'S FACILITIES WITHIN THE LIMITS OF THE WORK. WHETHER THEY ARE IDENTIFIED IN THE CONTRACT DOCUMENTS OR NOT.
12. THE CONTRACTOR SHALL NOTIFY UNDERGROUND SERVICE ALERT (800) 227-2600, AT LEAST TWO WORKING DAYS PRIOR TO THE START OF ANY EXCAVATION.

DEFINITIONS

1. "TYPICAL" OR "TYP" MEANS THAT THIS ITEM IS SUBSTANTIALLY THE SAME ACROSS SIMILAR CONDITIONS. "TYP." SHALL BE UNDERSTOOD TO MEAN "TYPICAL WHERE OCCURS" AND SHALL NOT BE CONSIDERED AS WITHOUT EXCEPTION OR CONSIDERATION OF SPECIFIC CONDITIONS.
2. "SIMILAR" MEANS COMPARABLE TO CHARACTERISTICS FOR THE CONDITION NOTED. VERIFY DIMENSIONS AND ORIENTATION ON PLAN.
3. "AS REQUIRED" MEANS AS REQUIRED BY REGULATORY REQUIREMENTS, BY REFERENCED STANDARDS, BY EXISTING CONDITIONS, BY GENERALLY ACCEPTED CONSTRUCTION PRACTICE, OR BY THE CONTRACT DOCUMENTS.
4. "ALIGN" MEANS ACCURATELY LOCATE FINISH FACES OF MATERIALS IN THE SAME PLANE.
5. THE TERM "VERIFY" OR "V.I.F." SHALL BE UNDERSTOOD TO MEAN "VERIFY IN FIELD WITH ENGINEER" AND REQUIRES THAT THE CONTRACTOR CONFIRM INTENTION REGARDING NOTED CONDITION AND PROCEED ONLY AFTER RECEIVING DIRECTION.
6. WHERE THE WORDS "OR EQUAL" OR WORDS OF SIMILAR INTENT FOLLOW A MATERIAL SPECIFICATION, THEY SHALL BE UNDERSTOOD TO REQUIRE SIGNED APPROVAL OF ANY DEVIATION TO SAID SPECIFICATION PRIOR TO CONTRACTOR'S ORDERING OR INSTALLATION OF SUCH PROPOSED EQUAL PRODUCT.
7. FURNISH : SUPPLY ONLY, OTHERS TO INSTALL. INSTALL: INSTALL ITEMS FURNISHED BY OTHERS. PROVIDE: FURNISH AND INSTALL.

FIELD WELDING NOTES:

1. WELDING TO BE PERFORMED BY AWS CERTIFIED WELDER FOR THE TYPE OF AND POSITION INDICATED. ALL WORK MUST BE IN CONFORMANCE WITH LATEST EDITION OF AWS D1.1.
2. GRIND SURFACES TO BE WELDED WITH A SILICON CARBIDE WHEEL PRIOR TO WELDING TO REMOVE ALL GALVANIZING WHICH MAY OTHERWISE BE CONSUMED IN THE WELD METAL. APPLY ANTI-SPATTER COMPOUND AFTER GRINDING.
3. WELDING TECHNIQUE MUST MINIMIZE TEMPERATURE RISE ON THE INSIDE SURFACE OF THE POLE AND ALSO VOLATIZE ANY REMAINING ZINC WITHIN THE BASE METAL WITH MINIMUM SPATTER, USE AN E70 (LOW HYDROGEN) ELECTRODE. USE LARGEST DIAMETER ELECTRODE COMPATIBLE WITH WELDING POSITION AND MATERIAL THICKNESS. STRICTLY FOLLOW ALL MANUFACTURE'S INSTRUCTIONS FOR STORAGE AND USE OF ELECTRODES. AVOID REMOVING ELECTRODES FROM MANUFACTURE'S PACKAGING UNTIL READY FOR IMMEDIATE USE.
4. WELDING MAY PRODUCE TOXIC FUMES. REFER TO ANSI STANDARD Z49.1 "SAFETY IN WELDING AND CUTTING" FOR PROPER PRECAUTIONS.
5. UPON COMPLETION OF WELDING, APPLY GALV-A-STICK ZINC COATING TO ALL UNPROTECTED SURFACES. APPLY A SECOND LAYER OF COLD GALVANIZING SPRAY COMPOUND CONTAINING A MINIMUM ZINC CONTENT OF 95%. IF NECESSARY, APPLY A FINAL COAT OF COMPATIBLE PAINT TO MATCH SURROUNDING SURFACES.

ANTENNA MOUNTING

1. DESIGN AND CONSTRUCTION OF ANTENNA SUPPORTS SHALL CONFORM TO CURRENT ANSI/TIA-222 OR APPLICABLE LOCAL CODES.
2. ALL STEEL MATERIALS SHALL BE GALVANIZED AFTER FABRICATION IN ACCORDANCE WITH ASTM A123 "ZINC (HOT-DIP GALVANIZED) COATINGS ON IRON AND STEEL PRODUCTS", UNLESS NOTED OTHERWISE.
3. ALL BOLTS, ANCHORS AND MISCELLANEOUS HARDWARE SHALL BE GALVANIZED IN ACCORDANCE WITH ASTM A153 "ZINC-COATING (HOT-DIP) ON IRON AND STEEL HARDWARE", UNLESS NOTED OTHERWISE.
4. DAMAGED GALVANIZED SURFACES SHALL BE REPAIRED BY COLD GALVANIZING IN ACCORDANCE WITH ASTM A780.
5. ALL ANTENNA MOUNTS SHALL BE INSTALLED WITH LOCK NUTS, DOUBLE NUTS AND SHALL BE TORQUED TO MANUFACTURER'S RECOMMENDATIONS.
6. CONTRACTOR SHALL INSTALL ANTENNA PER MANUFACTURER'S RECOMMENDATION FOR INSTALLATION AND GROUNDING.
7. PRIOR TO SETTING ANTENNA AZIMUTHS AND DOWNTILTS, ANTENNA CONTRACTOR SHALL CHECK THE ANTENNA MOUNT FOR TIGHTNESS AND ENSURE THAT THEY ARE PLUMB. ANTENNA AZIMUTHS SHALL BE SET FROM TRUE NORTH AND BE ORIENTED WITHIN +/- 5% AS DEFINED BY THE RFDS. ANTENNA DOWNTILTS SHALL BE WITHIN +/- 0.5% AS DEFINED BY THE RFDS.

TORQUE REQUIREMENTS

1. ALL RF CONNECTIONS SHALL BE TIGHTENED BY A TORQUE WRENCH.
2. ALL RF CONNECTIONS, GROUNDING HARDWARE AND ANTENNA HARDWARE SHALL HAVE A TORQUE MARK INSTALLED IN A CONTINUOUS STRAIGHT LINE FROM BOTH SIDES OF THE CONNECTION.
   A. RF CONNECTION BOTH SIDES OF THE CONNECTOR.
   B. GROUNDING AND ANTENNA HARDWARE ON THE NUT SIDE STARTING FROM THE THREADS TO THE SOLID SURFACE. EXAMPLE OF SOLID SURFACE: GROUND BAR, ANTENNA BRACKET METAL.
3. ALL 8M ANTENNA HARDWARE SHALL BE TIGHTENED TO 9 LB-FT (12 NM).
4. ALL 12M ANTENNA HARDWARE SHALL BE TIGHTENED TO 43 LB-FT (58 NM).
5. ALL GROUNDING HARDWARE SHALL BE TIGHTENED UNTIL THE LOCK WASHER COLLAPSES AND THE GROUNDING HARDWARE IS NO LONGER LOOSE.
6. ALL DIN TYPE CONNECTIONS SHALL BE TIGHTENED TO 18-22 LB-FT (24.4 - 29.8 NM).
7. ALL N TYPE CONNECTIONS SHALL BE TIGHTENED TO 15-20 LB-IN (1.7 - 2.3 NM).

ROW UTILITY POLE CONSTRUCTION NOTES

1. NO BOLT THREADS TO PROTRUDE MORE THAN 1-1/2" [.038M].
2. FILL ALL HOLES LEFT IN POLE FROM REARRANGEMENT OF CLIMBERS.
3. ALL CLIMB STEPS NEXT TO CONDUIT SHALL HAVE EXTENDED STEPS.
4. CABLE NOT TO IMPEDE 15" [.381M] CLEAR SPACE OFF POLE FACE (12:00).
5. 90 SHORT SWEEPS UNDER ANTENNA ARM. ALL CABLES MUST ONLY TRANSITION ON THE INSIDE OR BOTTOM OF ARMS (NO CABLE ON TOP OF ARMS).
6. USE 90 CONNECTOR AT CABLE CONNECTION TO ANTENNAS.
7. USE 1/2" [.013M] CABLE ON ANTENNAS UNLESS OTHERWISE SPECIFIED.
8. FILL VOID AROUND CABLES AT CONDUIT OPENING WITH FOAM SEALANT TO PREVENT WATER INTRUSION.

NODE SITE POWER SHUT DOWN PROCEDURES

1. FOR NON EMERGENCY/SCHEDULED POWER SHUT DOWN
   A. CALL EXTENET SYSTEMS NOC (NETWORK OPERATIONS CENTER) (866)892-5327
   B. 24 HOURS PRIOR TO SCHEDULED POWER SHUT OFF
   C. PROVIDE THE FOLLOWING INFORMATION
      - NOC SITE NUMBER IDENTIFIED ON SITE NUMBERING STICKER
      - YOUR NAME AND REASON FOR POWER SHUTOFF
      - PROVIDE DURATION OF OUTAGE
   D. UNLOCK DISCONNECT BOX, FLIP BOTH BREAKERS TO THE OFF POSITION
   E. POWER SHUT OFF VERIFICATION WITH APPROVED PG&E PROCEDURES
   F. NOTIFY EXTENET NOC UPON COMPLETION OF WORK
   G. REINSTALL LOCK ON DISCONNECT BOX
2. EMERGENCY POWER SHUT OFF
   A. CALL EXTENET SYSTEMS NOC (NETWORK OPERATIONS CENTER) (866)892-5327
   B. PROVIDE THE FOLLOWING INFORMATION
      - NOC SITE NUMBER IDENTIFIED ON SITE NUMBERING STICKER
      - YOUR NAME AND REASON FOR POWER SHUTOFF
      - PROVIDE DURATION OF OUTAGE
   D. UNLOCK DISCONNECT BOX, FLIP BOTH BREAKERS TO THE OFF POSITION
   E. POWER SHUT OFF VERIFICATION WITH APPROVED PG&E PROCEDURES
   F. NOTIFY EXTENET NOC UPON COMPLETION OF WORK
   G. REINSTALL LOCK ON DISCONNECT BOX

LEGEND

EXOTHERMIC CONNECTION
MECHANICAL CONNECTION
CHEMICAL ELECTROLYTIC GROUNDING SYSTEM
TEST CHEMICAL ELECTROLYTIC GROUNDING SYSTEM (T)
EXOTHERMIC WITH INSPECTION SLEEVE
GROUNDING BAR
GROUND ROD
TEST GROUND ROD WITH INSPECTION SLEEVE (T)
CHAINLINK FENCE (X)
WOOD/WROUGHT IRON FENCE
WALL STRUCTURE
LEASE AREA
PROPERTY LINE (PL)
SETBACKS
WATER LINE (W)
UNDERGROUND POWER (UGP)
UNDERGROUND TELCO (UGT)
UNDERGROUND FIBER (UGF)
OVERHEAD POWER (OHP)
OVERHEAD TELCO (OHT)
UNDERGROUND TELCO/POWER (UGT/P)
ABOVE GROUND POWER (AGP)
ABOVE GROUND TELCO (AGT)
ABOVE GROUND TELCO/POWER (AGT/P)
SECTION REFERENCE (XX / X-X)
DETAIL REFERENCE (XX / X-X)

extenet SYSTEMS mConnectivity Everywhere

INTERNAL REVIEW
CONSTRUCTION SIGNATURE DATE
RF SIGNATURE DATE
REAL ESTATE SIGNATURE DATE

BLACK & VEATCH
BLACK & VEATCH CORPORATION
2999 OAK ROAD
SUITE 490
WALNUT CREEK, CA 94597

THESE DRAWINGS ARE COPYRIGHTED AND ARE THE PROPERTY OF BLACK & VEATCH; PRODUCED SOLELY FOR THE USE OF OUR CLIENT. ANY REPRODUCTION OR USE OF THE INFORMATION CONTAINED WITHIN SAID DRAWINGS IS PROHIBITED WITHOUT WRITTEN CONSENT BY BLACK & VEATCH.

PROJECT NO.	DRAWN BY	CHECKED BY
192417.9505	MPD	GAC

REV	DATE	DESCRIPTION
D	09/23/16	ISSUED FOR REVIEW
C	09/13/16	CLIENT COMMENTS
B	09/09/16	ISSUED FOR REVIEW
A	09/07/16	ISSUED FOR REVIEW

PRELIMINARY

IT IS A VIOLATION OF LAW FOR ANY PERSON, UNLESS THEY ARE ACTING UNDER THE DIRECTION OF A LICENSED PROFESSIONAL ENGINEER, TO ALTER THIS DOCUMENT.

EXTENET SYSTEMS (CA) LLC
2000 CROW CANYON PLACE
SUITE 210
SAN RAMON, CA 94583

SITE ADDRESS
ADJACENT TO (IN PROW)
7901 OAKPORT STREET
OAKLAND, CA 94621

SHEET TITLE
GENERAL NOTES AND SCHEDULES

SHEET NUMBER
GN-1

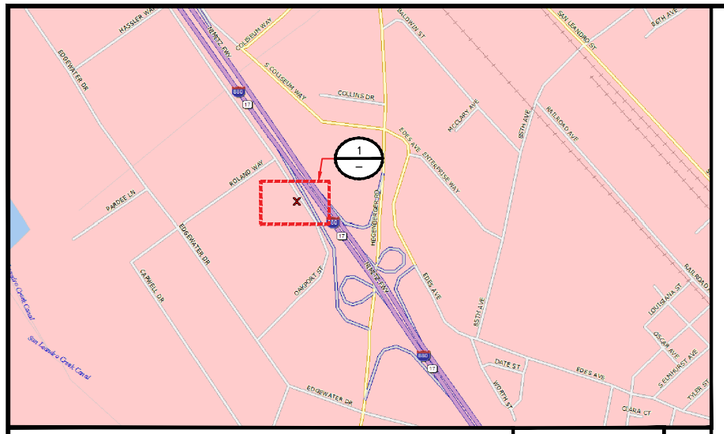

SITE PLAN PHOTO | NO SCALE | A

THIS DRAWING IS NOT A SITE SURVEY

THE PURPOSE OF THIS DRAWING IS TO SHOW HOW THE DEVELOPED SITE RELATES TO THE PARENT PARCEL AND ADJACENT PROPERTIES. R.O.W. MEASUREMENTS ARE APPROXIMATIONS.

EXISTING CENTER LINE OF ROAD (TYP)

OAKPORT STREET

EXISTING RIGHT OF WAY

NODE 06295B

APN# 42-4435-8-3

EXISTING PROPERTY LINE (TYP)

A
220°

APN# 42-4435-4-10

EXISTING SIDEWALK

N
0°
45°
90°
135°
180°
225°
270°
315°

OVERALL SITE PLAN | 16' 12' 8' 4' 0 16' 32' 1/16"=1'-0" | 1

extenet SYSTEMS mConnectivity Everywhere

INTERNAL REVIEW	
CONSTRUCTION SIGNATURE	DATE
RF SIGNATURE	DATE
REAL ESTATE SIGNATURE	DATE

BLACK & VEATCH

BLACK & VEATCH CORPORATION
2999 OAK ROAD
SUITE 490
WALNUT CREEK, CA 94597

THESE DRAWINGS ARE COPYRIGHTED AND ARE THE PROPERTY OF BLACK & VEATCH; PRODUCED SOLELY FOR THE USE OF OUR CLIENT. ANY REPRODUCTION OR USE OF THE INFORMATION CONTAINED WITHIN SAID DRAWINGS IS PROHIBITED WITHOUT WRITTEN CONSENT BY BLACK & VEATCH.

PROJECT NO.	DRAWN BY	CHECKED BY
192417.9505	MPD	GAC

REV	DATE	DESCRIPTION
D	09/23/16	ISSUED FOR REVIEW
C	09/13/16	CLIENT COMMENTS
B	09/09/16	ISSUED FOR REVIEW
A	09/07/16	ISSUED FOR REVIEW

PRELIMINARY

IT IS A VIOLATION OF LAW FOR ANY PERSON, UNLESS THEY ARE ACTING UNDER THE DIRECTION OF A LICENSED PROFESSIONAL ENGINEER, TO ALTER THIS DOCUMENT.

EXTENET SYSTEMS (CA) LLC
2000 CROW CANYON PLACE
SUITE 210
SAN RAMON, CA 94583

SITE ADDRESS

ADJACENT TO (IN PROW)
7901 OAKPORT STREET
OAKLAND, CA 94621

SHEET TITLE

OVERALL SITE PLAN

SHEET NUMBER

C-1

NOTE:

THESE DRAWINGS HAVE BEEN CREATED BASED ON THE ASSUMPTION THAT THE STRUCTURE HAS SUFFICIENT CAPACITY TO SUPPORT THE PROPOSED LOADING. IT IS THE RESPONSIBILITY OF THE POLE OWNER TO CONFIRM THAT THE PROPOSED LOADING IS WITHIN THE ORIGINAL DESIGN CAPACITY OF THE STRUCTURE.

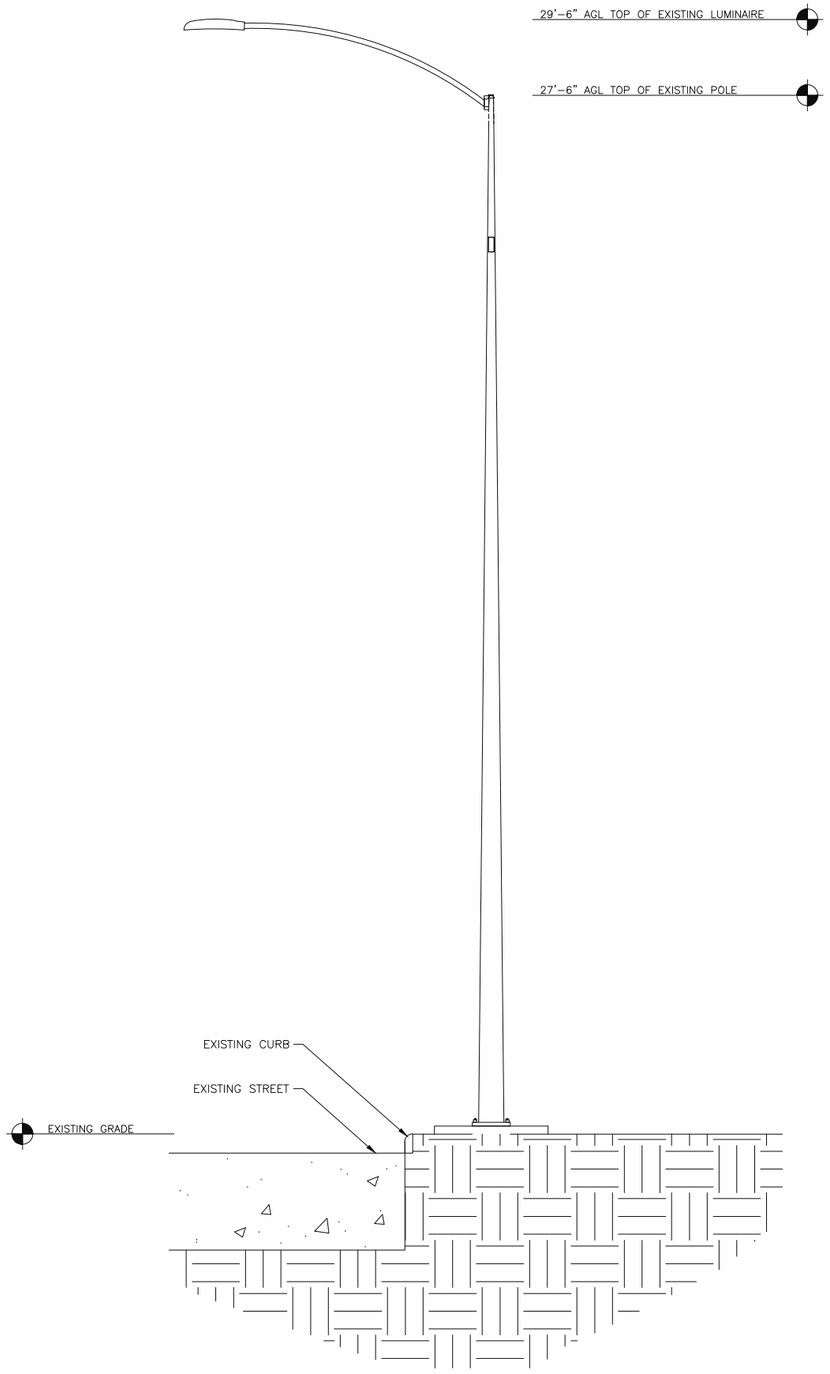

EXISTING SOUTHEAST ELEVATION | 12" 6" 0 1' 2' 3' 4' 5" 1/2"=1'-0" | 1

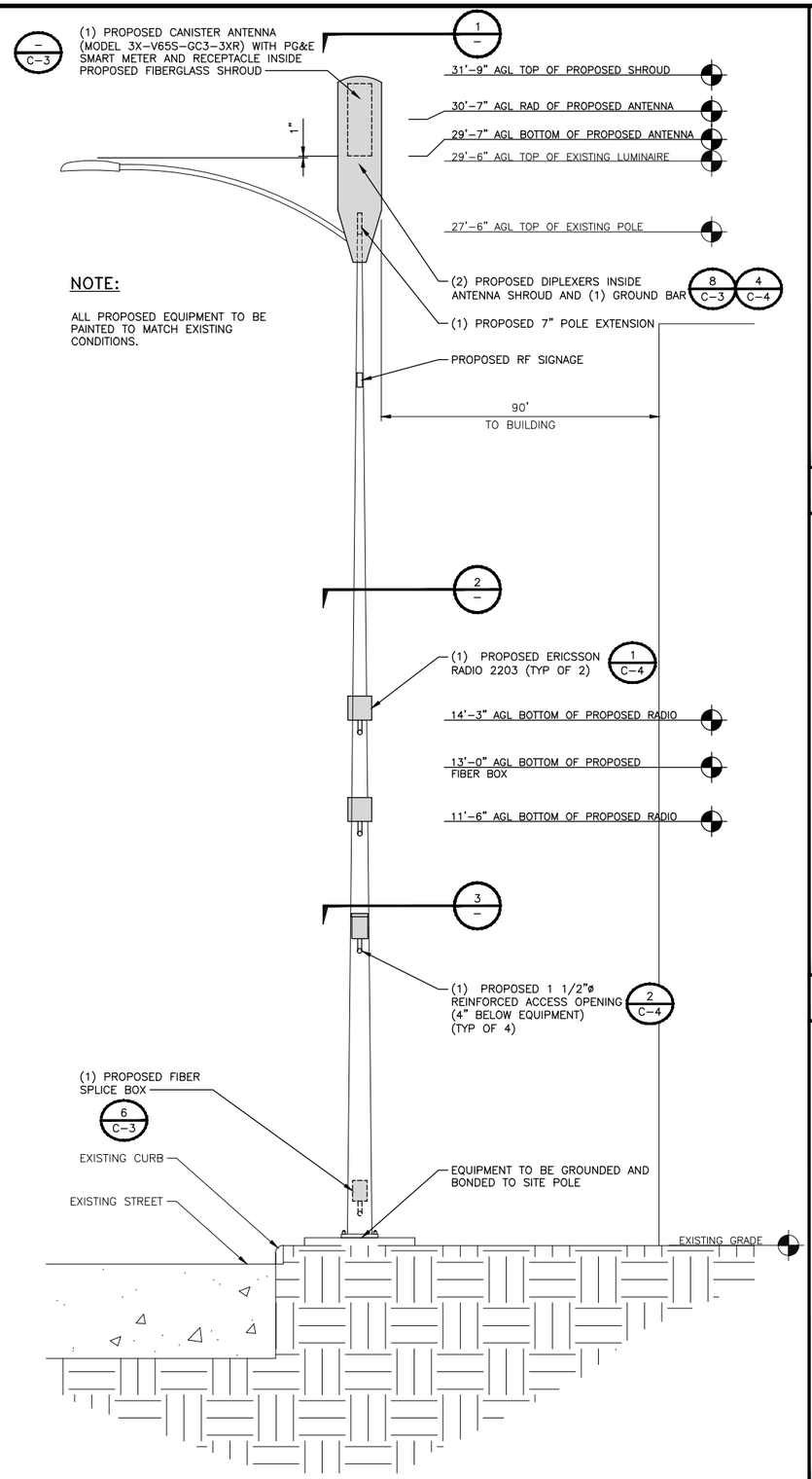

NOTE:

ALL PROPOSED EQUIPMENT TO BE PAINTED TO MATCH EXISTING CONDITIONS.

PROPOSED SOUTHEAST ELEVATION | 12" 6" 0 1' 2' 3' 4' 5" 1/2"=1'-0" | 2

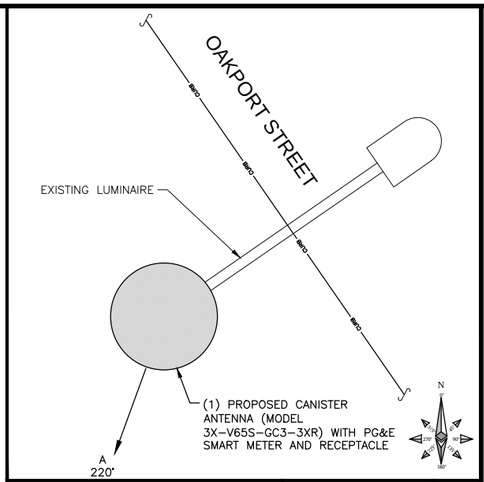

ANTENNA SPACE PLAN VIEW | NO SCALE | 3

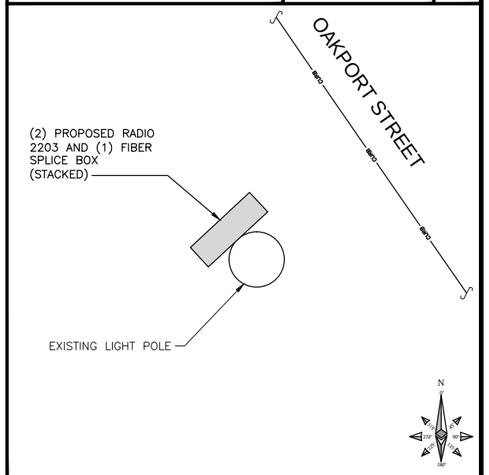

RADIO SPACE PLAN VIEW | NO SCALE | 4

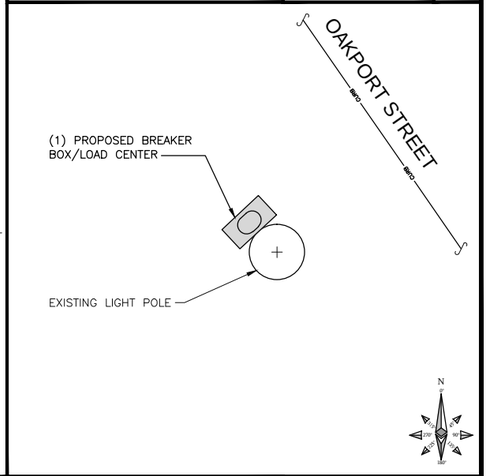

EQUIPMENT PLAN VIEW | NO SCALE | 5

extenet SYSTEMS mConnectivity Everywhere

INTERNAL REVIEW	
CONSTRUCTION SIGNATURE	DATE
RF SIGNATURE	DATE
REAL ESTATE SIGNATURE	DATE

BLACK & VEATCH

BLACK & VEATCH CORPORATION
2999 OAK ROAD
SUITE 490
WALNUT CREEK, CA 94597

THESE DRAWINGS ARE COPYRIGHTED AND ARE THE PROPERTY OF BLACK & VEATCH; PRODUCED SOLELY FOR THE USE OF OUR CLIENT. ANY REPRODUCTION OR USE OF THE INFORMATION CONTAINED WITHIN SAID DRAWINGS IS PROHIBITED WITHOUT WRITTEN CONSENT BY BLACK & VEATCH.

PROJECT NO.	DRAWN BY	CHECKED BY
192417.9505	MPD	GAC

REV	DATE	DESCRIPTION
D	09/23/16	ISSUED FOR REVIEW
C	09/13/16	CLIENT COMMENTS
B	09/09/16	ISSUED FOR REVIEW
A	09/07/16	ISSUED FOR REVIEW

PRELIMINARY

IT IS A VIOLATION OF LAW FOR ANY PERSON, UNLESS THEY ARE ACTING UNDER THE DIRECTION OF A LICENSED PROFESSIONAL ENGINEER, TO ALTER THIS DOCUMENT.

EXTENET SYSTEMS (CA) LLC
2000 CROW CANYON PLACE
SUITE 210
SAN RAMON, CA 94583

SITE ADDRESS

ADJACENT TO (IN PROW)
7901 OAKPORT STREET
OAKLAND, CA 94621

SHEET TITLE

UTILITY POLE ELEVATIONS AND RISER DETAILS

SHEET NUMBER

C-2

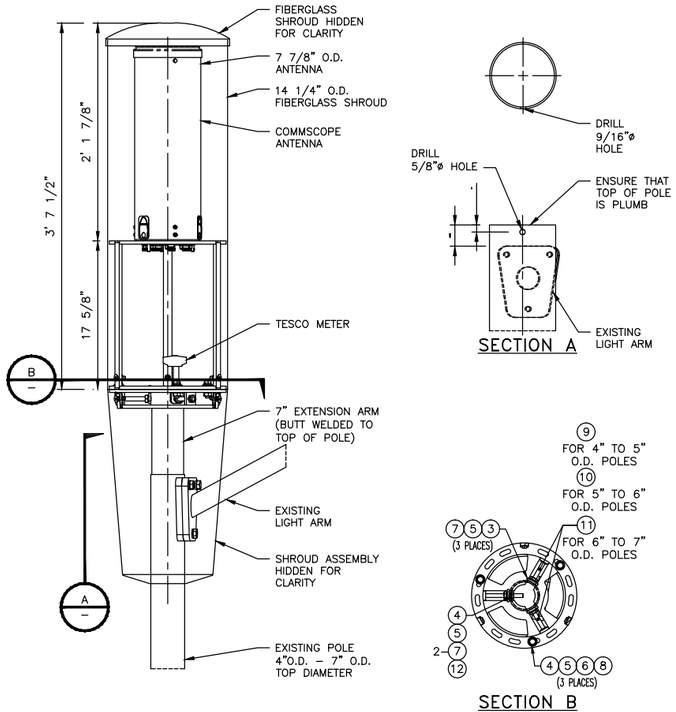

SECTION A

SECTION B
(SHOWN ON A 4"O.D. POLE)

SHROUD / ANTENNA ELEVATION VIEW | NO SCALE | 1

NOTE

ANTENNA NOT SHOWN FOR CLARITY

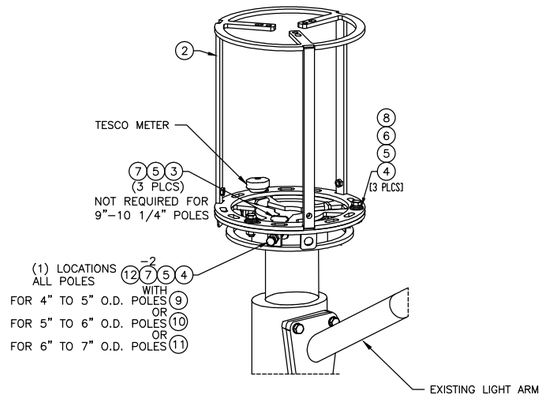

CLAMP–ON BRACKET | NO SCALE | 2

ITEM #	PART #	DESCRIPTION	QTY.	UNIT WT. (LBS)
		CLAMP-ON BRACKET PARTS / HARDWARE		
1	WA-943	3/8" x 13 7/8" O.D. A36, TOP CAP WLDMNT	1	13.7
2	WA-1049	3/8" x 1'-1 7/8" O.D. A36, TOP MOUNT WLDMNT	1	15.9
3	PL-1655	1/4"x1 5/8"x2 1/8" A36, PLATE	3	0.2
4	40027	1/2"Ø x 1.032" O.D. x .121" FLAT WASHER, S.S.	4	0.02
5	43020	1/2"Ø LOCK WASHER, S.S.	7	0.01
6	44005	1/2"Ø FLAT WASHER, NYLON	3	0.01
7	52005	1/2"Ø JAM NUT, S.S.	5	0.04
8	71012F	1/2"Ø x 1 3/4" S.S. FULLY THD'D BOLT	3	0.1
9	71052F	1/2"Ø x 3" FULLY THD'D BOLT, S.S.	2	0.2
10	71051F	1/2"Ø x 3 1/2" FULLY THD'D BOLT, S.S.	2	0.24
11	71053F	1/2"Ø x 4" FULLY THD'D BOLT, S.S.	2	0.3
12	80333	1/2"Ø x 6" S.S. THREADED ROD	1	0.3
		SHROUD ASSEMBLY & COVER PLATE PARTS / HARDWARE		
13	WA-1048	14 1/4" O.D. x 1/8"w x 3'-5 1/2" FIBERGLASS, SHROUD ASSEMBLY	1	23.8
14	404-15	14GA. x 14 1/4" TD x 4 1/4" BD x 23 1/16" TL A569 WELD	1	10.3
15	404-16	14GA. x 14 1/4" TD x 4 1/4" BD x 23 1/16" TL A569 WELD	1	10.3
16	209-4	11GA. x 1 1/2" x 2 15/16" A36, FORMED PLATE	4	0.1
17	55500	1/4-20 U-STYLE SPEED NUT	8	0.02
18	70399	1/4"Ø x 3/4" SS, CNTR SUNK SCKET HD SCREW	8	0.01
19	55510	3/8-16 SPEED NUT	3	0.04
20	70428	3/8"Ø x 1 1/4" COUNTERSUNK SCKT HD SCREW, S.S.	6	0.01
		TOTAL GALV. WT.		75

EQUIPMENT TABLE | NO SCALE | 3

NOTE

IF EXISTING POLE HAS A LIGHT ARM, SHROUD HALVES MUST BE FIELD CUT.

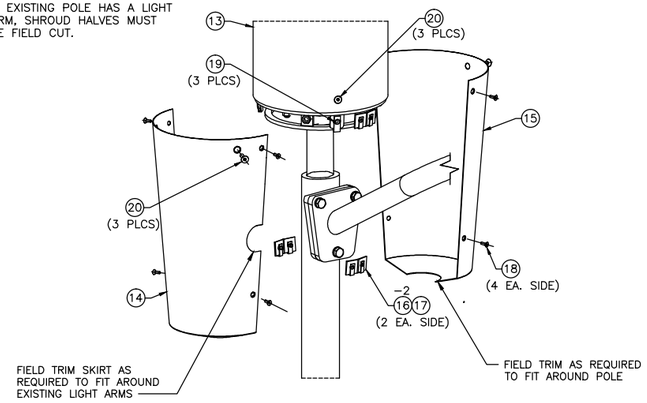

SHROUD ASSEMBLY | NO SCALE | 4

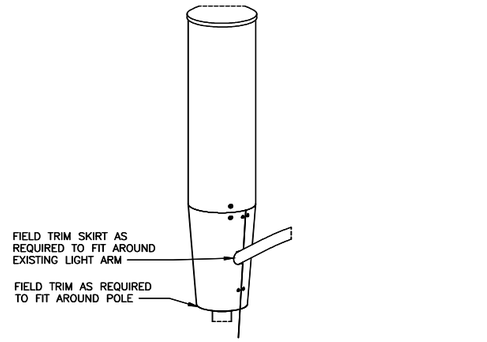

SHROUD ASSEMBLY (AS ASSEMBLED) | NO SCALE | 5

F1–4868–FSS FUSION SPLICE ENCLOSURE

DEPTH:	2 1/8" (D)
HEIGHT:	6 3/4" (H)
WIDTH:	4 3/4" (W)

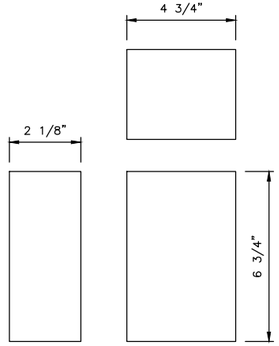

FIBER SPLICE BOX SPECIFICATION | NO SCALE | 6

COMMSCOPE 3X–V65S–GC3–3XR

RADOME COLOR:	LIGHT GREY
RADOME MATERIAL:	FIBERGLASS, UV RESISTANT
DIAMETER:	7.9" (200mm)
HEIGHT:	23.5" (596mm)
TOTAL WEIGHT (WITHOUT BRACKETS):	7.2 Kg (15.9 LB)
CONNECTOR INTERFACE:	4.1–9.5 DIN FEMALE
RF CONNECTOR LOCATION:	BOTTOM
RF CONNECTOR QUANTITY:	6

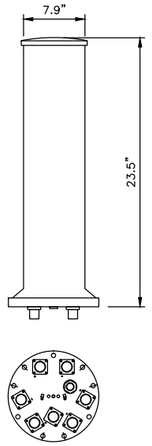

ANTENNA SPECIFICATION | NO SCALE | 7

COMMSCOPE CBC 1923–4310/ E11F13P20

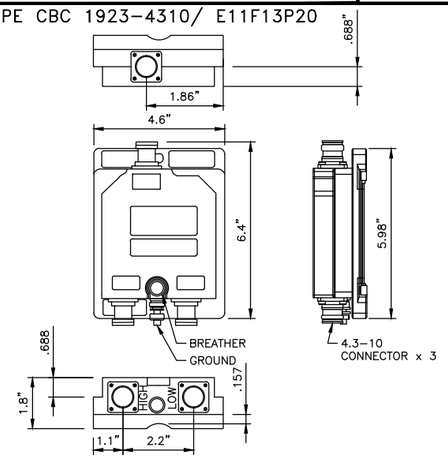

DIPLEXER SPECIFICATION | NO SCALE | 8

extenet SYSTEMS mConnectivity Everywhere

INTERNAL REVIEW	
CONSTRUCTION SIGNATURE	DATE
RF SIGNATURE	DATE
REAL ESTATE SIGNATURE	DATE

BLACK & VEATCH

BLACK & VEATCH CORPORATION
2999 OAK ROAD
SUITE 490
WALNUT CREEK, CA 94597

THESE DRAWINGS ARE COPYRIGHTED AND ARE THE PROPERTY OF BLACK & VEATCH; PRODUCED SOLELY FOR THE USE OF OUR CLIENT. ANY REPRODUCTION OR USE OF THE INFORMATION CONTAINED WITHIN SAID DRAWINGS IS PROHIBITED WITHOUT WRITTEN CONSENT BY BLACK & VEATCH.

PROJECT NO.	DRAWN BY	CHECKED BY
192417.9505	MPD	GAC

REV	DATE	DESCRIPTION
D	09/23/16	ISSUED FOR REVIEW
C	09/13/16	CLIENT COMMENTS
B	09/09/16	ISSUED FOR REVIEW
A	09/07/16	ISSUED FOR REVIEW

PRELIMINARY

IT IS A VIOLATION OF LAW FOR ANY PERSON, UNLESS THEY ARE ACTING UNDER THE DIRECTION OF A LICENSED PROFESSIONAL ENGINEER, TO ALTER THIS DOCUMENT.

EXTENET SYSTEMS (CA) LLC
2000 CROW CANYON PLACE
SUITE 210
SAN RAMON, CA 94583

SITE ADDRESS

ADJACENT TO (IN PROW)
7901 OAKPORT STREET
OAKLAND, CA 94621

SHEET TITLE

EQUIPMENT DETAILS

SHEET NUMBER

C-3

ERICSSON RADIO 2203

LENGTH:	7.8" (200MM)
WIDTH:	7.8" (200MM)
DEPTH:	3.93" (100MM)
TOTAL WEIGHT (WITHOUT BRACKETS):	<4.5 Kg

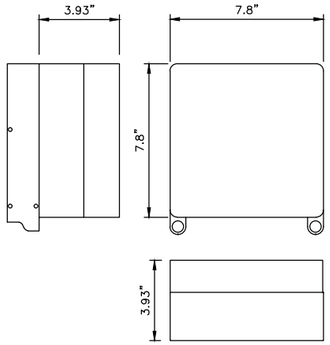

RADIO SPECIFICATION DETAIL | NO SCALE | 1

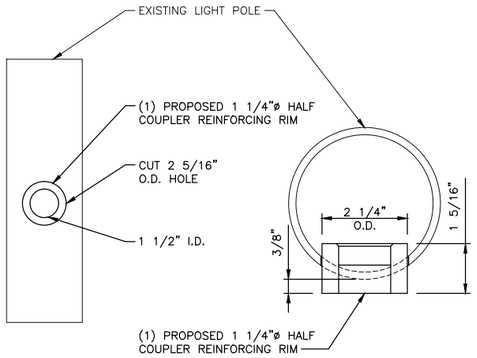

VERTICAL ACCESS PORT DETAIL | NO SCALE | 2

NOTICE

Beyond This Point you are entering a controlled area where RF emissions *may exceed* the FCC General Population Exposure Limits.

Follow all posted signs and site guidelines for working in a RF environment.

Ref: 47CFR 1.1307(b)

CAUTION

Beyond This Point you are entering a controlled area where RF emissions *may exceed* the FCC Occupational Exposure Limits.

Obey all posted signs and site guidelines for working in a RF environment.

Ref: 47CFR 1.1307(b)

NOTE: SPECIFIC EME PLACARD WILL BE PLACED AFTER EME REPORT

RF SIGNAGE DETAIL | NO SCALE | 3

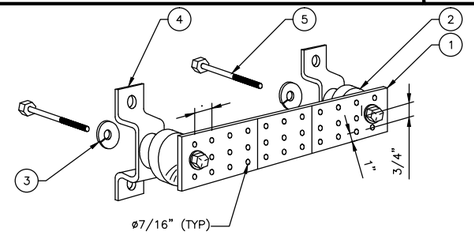

LEGEND

1. COPPER TINNED GROUND BAR HOLE CENTERS TO MATCH NEMA DOUBLE LUG CONFIGURATION
2. INSULATORS
3. 5/8" LOCKWASHERS
4. WALL MOUNTING BRACKETS
5. 5/8"–11 X 1" H.H.C.S. BOLTS

GROUND BAR | NO SCALE | 4

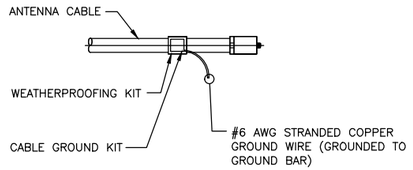

ANTENNA CABLE GROUND KIT | NO SCALE | 5

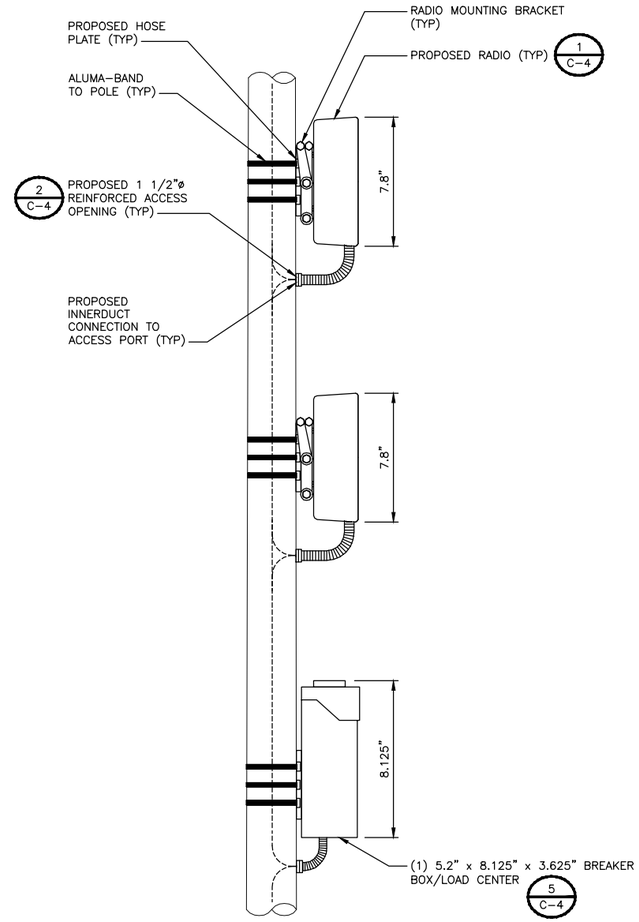

EQUIPMENT PLACEMENT DETAIL | NO SCALE | 8

MURRAY LW002GRU SPECIFICATION

DIMENSIONS

LOAD CENTER DEPTH:	3.625"
LOAD CENTER WIDTH:	5.2"
LOAD CENTER HEIGHT:	8.125"
WEIGHT:	4.55 LB
LOAD CENTER TYPE:	MAIN LUG
MAX AMPERAGE:	60
MOUNTING TYPE:	PLUG IN
NUMBER OF PHASES:	1
NUMBER OF SPACES:	2
VOLTAGE (VOLTS):	120/240
INDOOR/OUTDOOR:	OUTDOOR
ELECTRICAL PRODUCT TYPE:	LOAD CENTER

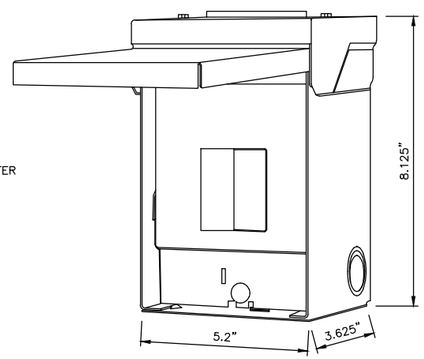

BREAKER BOX SPECIFICATION | NO SCALE | 6

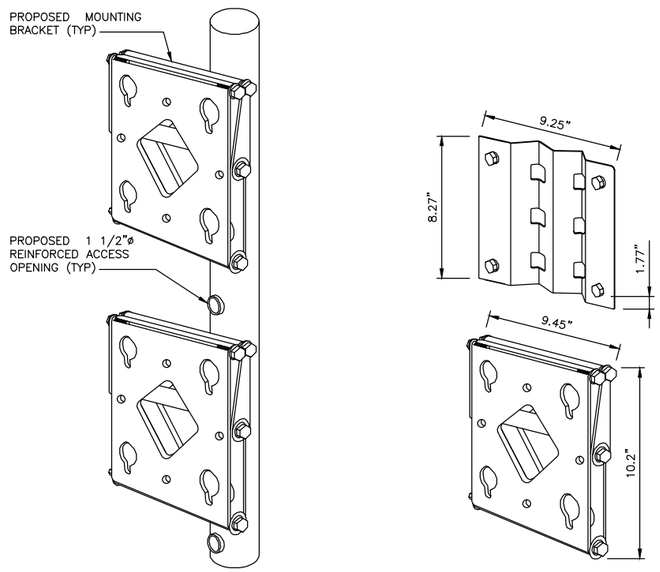

RADIO POLE MOUNTING DETAILS | NO SCALE | 7

extenet SYSTEMS mConnectivity Everywhere

INTERNAL REVIEW

CONSTRUCTION SIGNATURE DATE

RF SIGNATURE DATE

REAL ESTATE SIGNATURE DATE

BLACK & VEATCH

BLACK & VEATCH CORPORATION
2999 OAK ROAD
SUITE 490
WALNUT CREEK, CA 94597

THESE DRAWINGS ARE COPYRIGHTED AND ARE THE PROPERTY OF BLACK & VEATCH; PRODUCED SOLELY FOR THE USE OF OUR CLIENT. ANY REPRODUCTION OR USE OF THE INFORMATION CONTAINED WITHIN SAID DRAWINGS IS PROHIBITED WITHOUT WRITTEN CONSENT BY BLACK & VEATCH.

PROJECT NO.	DRAWN BY	CHECKED BY
192417.9505	MPD	GAC

REV	DATE	DESCRIPTION
D	09/23/16	ISSUED FOR REVIEW
C	09/13/16	CLIENT COMMENTS
B	09/09/16	ISSUED FOR REVIEW
A	09/07/16	ISSUED FOR REVIEW

PRELIMINARY

IT IS A VIOLATION OF LAW FOR ANY PERSON, UNLESS THEY ARE ACTING UNDER THE DIRECTION OF A LICENSED PROFESSIONAL ENGINEER, TO ALTER THIS DOCUMENT.

EXTENET SYSTEMS (CA) LLC
2000 CROW CANYON PLACE
SUITE 210
SAN RAMON, CA 94583

SITE ADDRESS

ADJACENT TO (IN PROW)
7901 OAKPORT STREET
OAKLAND, CA 94621

SHEET TITLE

EQUIPMENT DETAILS

SHEET NUMBER

C-4

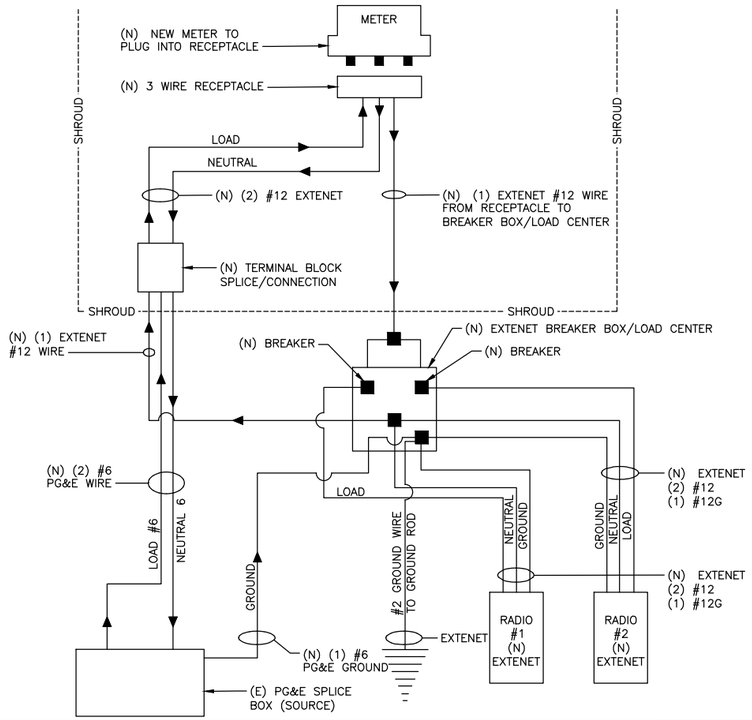

CONCEPTUAL WIRING SCHEMATIC | NO SCALE | 1

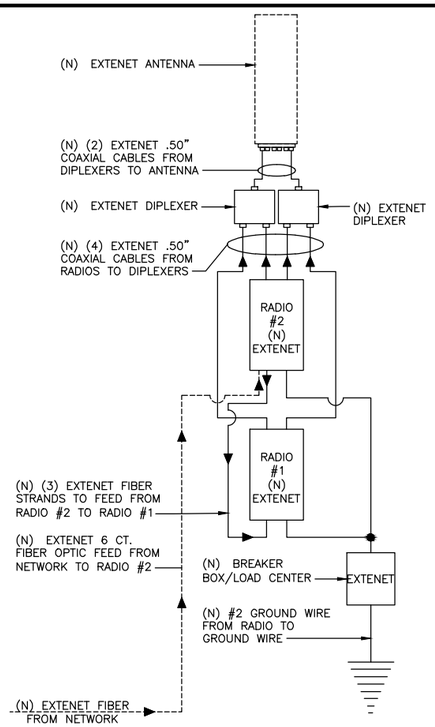

CONCEPTUAL FIBER / COAX SCHEMATIC | NO SCALE | 2

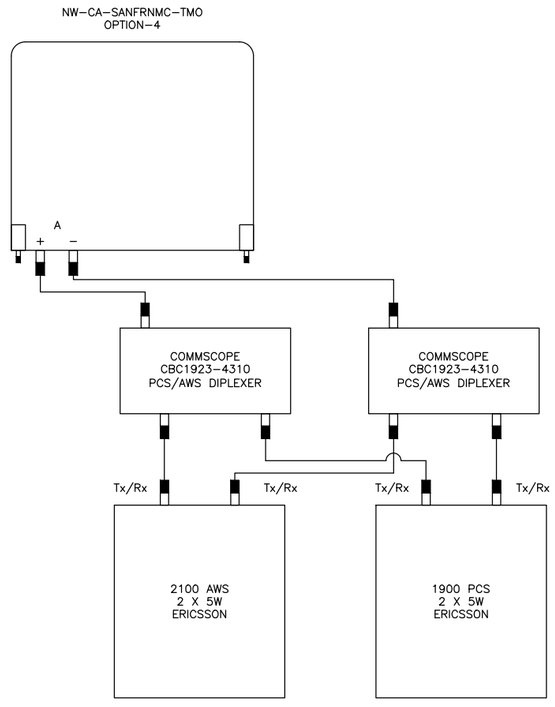

ANTENNA CONFIGURATION | NO SCALE | 3

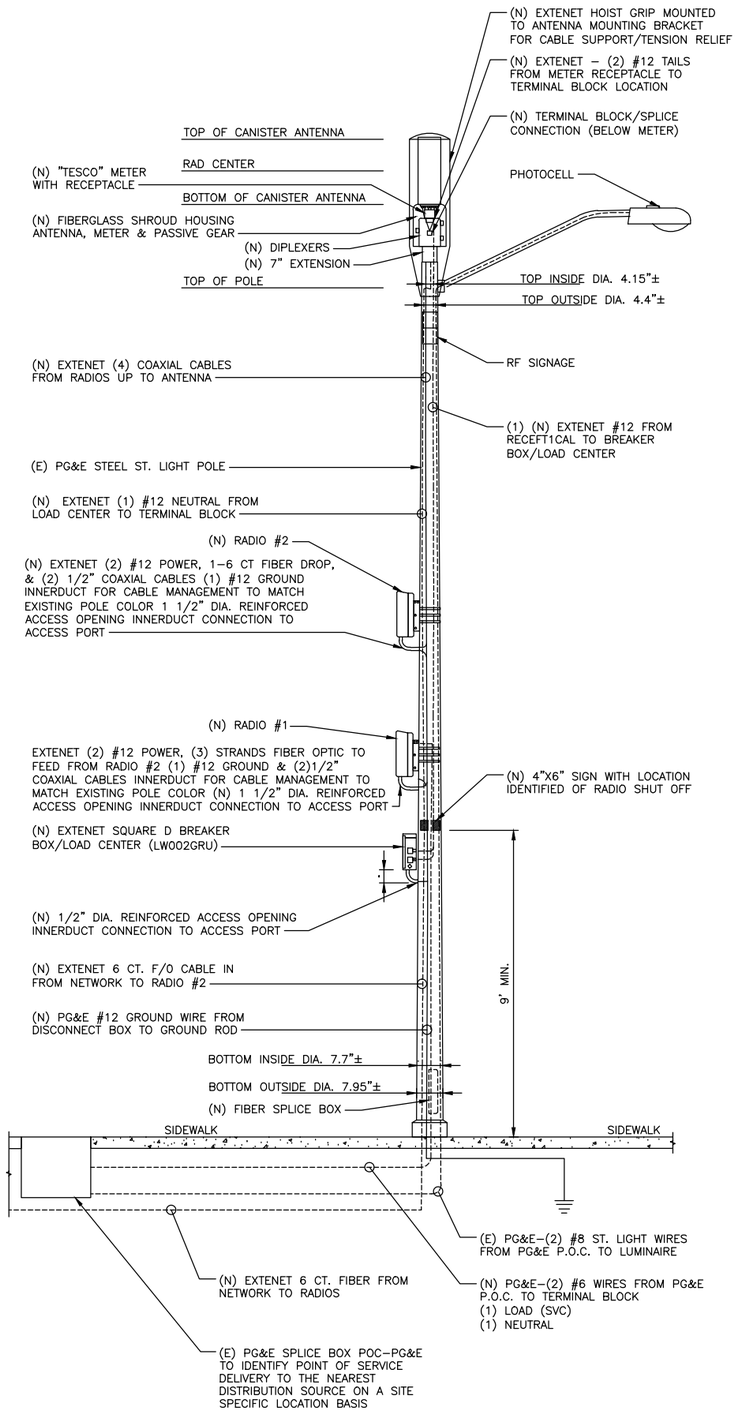

TYPICAL STEEL STREET LIGHT SITE TEMPLATE | NO SCALE | 4

extenet SYSTEMS mConnectivity Everywhere

INTERNAL REVIEW	
CONSTRUCTION SIGNATURE	DATE
RF SIGNATURE	DATE
REAL ESTATE SIGNATURE	DATE

BLACK & VEATCH

BLACK & VEATCH CORPORATION
2999 OAK ROAD
SUITE 490
WALNUT CREEK, CA 94597

THESE DRAWINGS ARE COPYRIGHTED AND ARE THE PROPERTY OF BLACK & VEATCH; PRODUCED SOLELY FOR THE USE OF OUR CLIENT. ANY REPRODUCTION OR USE OF THE INFORMATION CONTAINED WITHIN SAID DRAWINGS IS PROHIBITED WITHOUT WRITTEN CONSENT BY BLACK & VEATCH.

PROJECT NO.	DRAWN BY	CHECKED BY
192417.9505	MPD	GAC

REV	DATE	DESCRIPTION
D	09/23/16	ISSUED FOR REVIEW
C	09/13/16	CLIENT COMMENTS
B	09/09/16	ISSUED FOR REVIEW
A	09/07/16	ISSUED FOR REVIEW

PRELIMINARY

IT IS A VIOLATION OF LAW FOR ANY PERSON, UNLESS THEY ARE ACTING UNDER THE DIRECTION OF A LICENSED PROFESSIONAL ENGINEER, TO ALTER THIS DOCUMENT.

EXTENET SYSTEMS (CA) LLC
2000 CROW CANYON PLACE
SUITE 210
SAN RAMON, CA 94583

SITE ADDRESS

ADJACENT TO (IN PROW)
7901 OAKPORT STREET
OAKLAND, CA 94621

SHEET TITLE

CONCEPTUAL WIRING DIAGRAMS

SHEET NUMBER

C-5

1

2

880
2
06295B
1
N
W
E
S

extenet SYSTEMS

NW-CA-SANFRNMC 06295B

Adjacent to (IN PROW)
7901 Oakport Street Oakland, CA

Looking Northwest from Oakport Street

View #1

9/16/16

Applied Imagination 510 914-0500

NW-CA-SANFRNMC 06295B

Adjacent to (IN PROW)
7901 Oakport Street Oakland, CA

Looking South from Oakport Street

View #2

9/16/16

Applied Imagination 510 914-0500

October 21, 2016

Joe Marsh, Permit Coordinator
Port of Oakland
City of Oakland
530 Water Street
Oakland, CA 94607

Re: Proposed ExteNet Small Cell Node Installation

Applicant:	**ExteNet Systems (California) LLC**
Nearest Site Address:	**Public Right of Way near 7901 Oakport Street**
Site ID:	**NW-CA-SANFRANMC Node 06295B**
Latitude/Longitude:	**37.742801, -122.199079**

Dear Mr. Marsh,

On behalf of ExteNet Systems (California) LLC, this letter and attached materials are to apply for a design review permit to install a small cell node in the public right-of-way near 7901 Oakport Street ("Node 06295B").[1] The following is an explanation of the existing site, a project description of the designed facility, the project purpose and justifications in support of this proposal.

A. Project Description.

The proposed location for our facility currently consists of an approximate 27 foot tall metal pole in the public right-of-way on the west of Oakport Street just southeast of the intersection with Roland Way, at about 7901 Oakport Street.

ExteNet proposes to utilize existing pole measuring 27 feet above ground and to affix one canister antenna within an antenna shroud on top of a 7 inch pole extension at the pole. The antenna, measuring 23.5 inches long and 7.9 inches in diameter, will be placed on top of the pole, within the antenna shroud, at 29 feet 7 inches. The top of the antenna shroud will be at 31 feet 9 inches. Two proposed diplexers measuring 6.4 inches long, 4.6 inches wide and 1.8 inches deep will be placed inside the antenna shroud on top of the pole. Two MRRUs measuring 7.9 inches tall, 7.9 inches wide and 3.9 inches deep will be placed on the pole at 11 feet 6 inches and 14 feet 3 inch. A proposed fiber splice box measuring 6 ¾ inches tall, 4 ¾ inches wide and 2 1/8 inches deep will be placed on the pole at about 2 feet. All equipment will be painted to match the pole. Our proposal is depicted in the attached design drawings and photographic simulations.

This is an unmanned facility that will operate at all times (24 hours per day, seven days per week) and will be serviced about once per year. Our proposal will greatly benefit the area by improving wireless telecommunications service as detailed below.

B. Project Purpose.

[1] ExteNet expressly reserves all rights concerning the city's jurisdiction to assert zoning regulation over the placement of wireless facilities in the public rights-of-way.

ExteNet Systems
2000 Crow Canyon Place, Suite 210 • San Ramon, CA 94583
(415) 596-3474 • myergovich@extenetsystems.com

The purpose of this project is to provide T-Mobile third and fourth generation (3G and 4G) wireless voice and data coverage to the surrounding area where there is currently a significant gap in service coverage. These wireless services include mobile telephone, wireless broadband, emergency 911, data transfers, electronic mail, Internet, web browsing, wireless applications, wireless mapping and video streaming. The proposed node is part of a larger small cell providing coverage to areas of Oakland that are otherwise very difficult or impossible to cover using traditional macro wireless telecommunications facilities due to the local topography and mature vegetation.

A small cell network consists of a series of radio access nodes connected to small telecommunications antennas, typically mounted on existing poles within the public rights-of-way, to distribute wireless telecommunications signals. Small cell networks provide telecommunications transmission infrastructure for use by wireless services providers. These facilities allow service providers such as T-Mobile to establish or expand their network coverage and capacity. The nodes are linked by fiber optic cable that carry the signal stemming from a central equipment hub to a node antenna. Although the signal propagated from a node antenna spans over a shorter range than a conventional tower system, small cell can be an effective tool to close service coverage gaps.

C. Project Justification, Alternative Site and Design Analysis.

Node 06295B is an integral part of the overall small cell project, and it is located in a difficult coverage area near Edgewater Drive. The coverage area consists of a primarily commercial neighborhood off of Oakport Street, Roland Way, Edgewater Drive, and surrounding areas. Node 06295B will cover transient traffic along the roadways and provide in-building service to the surrounding residences.

Based on ExteNet's analysis of alternative sites the currently proposed Node 06295B is the least intrusive means to close T-Mobile's significant service coverage gap in the area. Node 06295B best uses existing utility infrastructure, adding small equipment without disturbing the character of the neighborhoods served. Deploying a small cell node at an existing pole location minimizes any visual impact by utilizing an inconspicuous spot. By installing antennas and equipment at this existing pole location, T-Mobile does not need to propose any new infrastructure in this coverage area.

The small cell node RF emissions are also much lower than the typical macro site, they are appropriate for the area, and they are fully compliant with the FCC's requirements for limiting human exposure to radio frequency energy. The attached radio frequency engineering analysis provided by Hammett & Edison, Inc., Consulting Engineers, confirms that the proposed equipment will operate well within (and actually far below) all applicable FCC public exposure limits. The facility will also comply with California Public Utility Commission (CPUC) General Order 170 (CEQA review) that governs utility use in the public right-of-way.

ExteNet considered alternative sites on other poles in this area but none of these sites is as desirable from construction, coverage or aesthetics perspectives. The proposed location is approximately equidistant from other small cell nodes that ExteNet plans to place in surrounding hard-to-reach areas, so that service coverage can be evenly distributed. The proposed facility is not in the path of any protected view sheds. The other poles in the area are more conspicuous than the proposed pole.

Alternative designs were considered including placing equipment inside of a ground-mounted cabinet. However, the pole-mounted equipment would better suit the area because it would blend in with the pole. We also evaluated whether equipment could be undergrounded but unfortunately this is not possible because there is insufficient right-of-way space for the necessary equipment access and the equipment would be compromised from saturation by rainwater. The antennas cannot be undergrounded because they rely on a line-of-site in order to properly transmit a signal.

Drawings, propagation maps, photographic simulations, and a radio-frequency engineering analysis are included with this packet.

As this application seeks authority to install a wireless telecommunication facility, the FCC's Shot Clock Order[2] requires the city to issue its final decision on ExteNet's application within 150 days. We respectfully request expedited review and approval of this application. Feel free to contact me if you have any questions. Thank you.

Thank you.

Best Regards,
EXTENET SYSTEMS

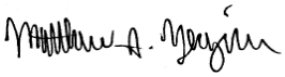

Matthew S. Yergovich

[2] *See* Petition for Declaratory Ruling to Clarify Provisions of Section 332(c)(7)(B), WT Docket No. 08-165, Declaratory Ruling, 24 F.C.C.R. 13994 (2009).

ExteNet Systems CA, LLC • Proposed DAS Node (Site No. 06295B)
7901 Oakport Street • Oakland, California

Statement of Hammett & Edison, Inc., Consulting Engineers

The firm of Hammett & Edison, Inc., Consulting Engineers, has been retained on behalf of ExteNet Systems CA, LLC, a wireless telecommunications carrier, to evaluate the addition of Node No. 06295B to be added to the ExteNet distributed antenna system ("DAS") in Oakland, California, for compliance with appropriate guidelines limiting human exposure to radio frequency ("RF") electromagnetic fields.

Executive Summary

ExteNet proposes to install a directional panel antenna on a light pole sited in the public right-of-way at 7901 Oakport Street in Oakland. The proposed operation will comply with the FCC guidelines limiting public exposure to RF energy.

Prevailing Exposure Standards

The U.S. Congress requires that the Federal Communications Commission ("FCC") evaluate its actions for possible significant impact on the environment. A summary of the FCC's exposure limits is shown in Figure 1. These limits apply for continuous exposures and are intended to provide a prudent margin of safety for all persons, regardless of age, gender, size, or health. The most restrictive FCC limit for exposures of unlimited duration to radio frequency energy for several personal wireless services are as follows:

Wireless Service	Frequency Band	Occupational Limit	Public Limit
Microwave (Point-to-Point)	5,000–80,000 MHz	5.00 mW/cm^2	1.00 mW/cm^2
BRS (Broadband Radio)	2,600	5.00	1.00
AWS (Advanced Wireless)	2,100	5.00	1.00
PCS (Personal Communication)	1,950	5.00	1.00
Cellular	870	2.90	0.58
SMR (Specialized Mobile Radio)	855	2.85	0.57
700 MHz	700	2.35	0.47
[most restrictive frequency range]	30–300	1.00	0.20

General Facility Requirements

Base stations typically consist of two distinct parts: the electronic transceivers (also called "radios" or "channels") that are connected to the traditional wired telephone lines, and the passive antennas that send the wireless signals created by the radios out to be received by individual subscriber units. The transceivers are often located at ground level and are connected to the antennas by coaxial cables. A small antenna for reception of GPS signals is also required, mounted with a clear view of the sky. Because of the short wavelength of the frequencies assigned by the FCC for wireless services, the antennas require line-of-sight paths for their signals to propagate well and so are installed at some

height above ground. The antennas are designed to concentrate their energy toward the horizon, with very little energy wasted toward the sky or the ground. This means that it is generally not possible for exposure conditions to approach the maximum permissible exposure limits without being physically very near the antennas.

Computer Modeling Method

The FCC provides direction for determining compliance in its Office of Engineering and Technology Bulletin No. 65, "Evaluating Compliance with FCC-Specified Guidelines for Human Exposure to Radio Frequency Radiation," dated August 1997. Figure 2 attached describes the calculation methodologies, reflecting the facts that a directional antenna's radiation pattern is not fully formed at locations very close by (the "near-field" effect) and that at greater distances the power level from an energy source decreases with the square of the distance from it (the "inverse square law"). The conservative nature of this method for evaluating exposure conditions has been verified by numerous field tests.

Site and Facility Description

Based upon information provided by ExteNet, including drawings by Black & Veatch Corporation, dated September 23, 2016, it is proposed to install one CommScope Model 3X-V65S-GC3-3XR, 2-foot tall, tri-directional cylindrical antenna, with one direction activated, on a light pole sited in the public right-of-way in front of the building located at 7901 Oakport Street in Oakland. The antenna would employ no downtilt, would be mounted at an effective height of about 30½ feet above ground, and its principal direction would be oriented toward 220T. T-Mobile proposes to operate from this facility with a maximum effective radiated power in any direction of 214 watts, representing simultaneous operation 107 watts for AWS, and 107 watts for PCS service. There are reported no other wireless telecommunications base stations at this site or nearby.

Study Results

For a person anywhere at ground, the maximum RF exposure level due to the proposed T-Mobile operation is calculated to be 0.0017 mW/cm^2, which is 0.17% of the applicable public exposure limit. The maximum calculated level at the second-floor elevation of any nearby building is 0.51% of the public exposure limit. It should be noted that these results include several "worst-case" assumptions and therefore are expected to overstate actual power density levels from the proposed operation.

Recommended Mitigation Measures

Due to its mounting location and height, the ExteNet antenna would not be accessible to the general public, and so no mitigation measures are necessary to comply with the FCC public exposure guidelines. To prevent occupational exposures in excess of the FCC guidelines, it is recommended

that appropriate RF safety training be provided to all authorized personnel who have access to the antenna, including employees and contractors of the utility companies. No access within 2 feet directly in front of the antenna itself, such as might occur during certain activities, should be allowed while the base station is in operation, unless other measures can be demonstrated to ensure that occupational protection requirements are met. Posting explanatory signs* on the pole at or below the antenna, such that the signs would be readily visible from any angle of approach to persons who might need to work within that distance, would be sufficient to meet FCC-adopted guidelines.

Conclusion

Based on the information and analysis above, it is the undersigned's professional opinion that operation of the node proposed by ExteNet Systems CA, LLC, at 7901 Oakport Street in Oakland, California, will comply with the prevailing standards for limiting public exposure to radio frequency energy and, therefore, will not for this reason cause a significant impact on the environment. The highest calculated level in publicly accessible areas is much less than the prevailing standards allow for exposures of unlimited duration. This finding is consistent with measurements of actual exposure conditions taken at other operating base stations. Training personnel and posting signs is recommended to establish compliance with occupational exposure limitations.

Authorship

The undersigned author of this statement is a qualified Professional Engineer, holding California Registration No. E-18063, which expires on June 30, 2017. This work has been carried out under his direction, and all statements are true and correct of his own knowledge except, where noted, when data has been supplied by others, which data he believes to be correct.

Rajat Mathur, P.E.
707/996-5200

October 3, 2016

* Signs should comply with OET-65 color, symbol, and content recommendations. Contact information should be provided (*e.g.*, a telephone number) to arrange for access to restricted areas. The selection of language(s) is not an engineering matter, and guidance from the landlord, local zoning or health authority, or appropriate professionals may be required. Signage may also need to comply with the requirements of California Public Utilities Commission General Order No. 95.

FCC Radio Frequency Protection Guide

The U.S. Congress required (1996 Telecom Act) the Federal Communications Commission ("FCC") to adopt a nationwide human exposure standard to ensure that its licensees do not, cumulatively, have a significant impact on the environment. The FCC adopted the limits from Report No. 86, "Biological Effects and Exposure Criteria for Radiofrequency Electromagnetic Fields," published in 1986 by the Congressionally chartered National Council on Radiation Protection and Measurements ("NCRP"). Separate limits apply for occupational and public exposure conditions, with the latter limits generally five times more restrictive. The more recent standard, developed by the Institute of Electrical and Electronics Engineers and approved as American National Standard ANSI/IEEE C95.1-2006, "Safety Levels with Respect to Human Exposure to Radio Frequency Electromagnetic Fields, 3 kHz to 300 GHz," includes similar limits. These limits apply for continuous exposures from all sources and are intended to provide a prudent margin of safety for all persons, regardless of age, gender, size, or health.

As shown in the table and chart below, separate limits apply for occupational and public exposure conditions, with the latter limits (in *italics* and/or dashed) up to five times more restrictive:

Frequency	Electromagnetic Fields (f is frequency of emission in MHz)					
Applicable Range (MHz)	Electric Field Strength (V/m)		Magnetic Field Strength (A/m)		Equivalent Far-Field Power Density (mW/cm^2)	
0.3 – 1.34	614	*614*	1.63	*1.63*	100	*100*
1.34 – 3.0	614	*823.8/ f*	1.63	*2.19/ f*	100	*180/ f^2*
3.0 – 30	1842/ f	*823.8/ f*	4.89/ f	*2.19/ f*	900/ f^2	*180/ f^2*
30 – 300	61.4	*27.5*	0.163	*0.0729*	1.0	*0.2*
300 – 1,500	$3.54\sqrt{f}$	*$1.59\sqrt{f}$*	$\sqrt{f}/106$	*$\sqrt{f}/238$*	f/300	*f/1500*
1,500 – 100,000	137	*61.4*	0.364	*0.163*	5.0	*1.0*

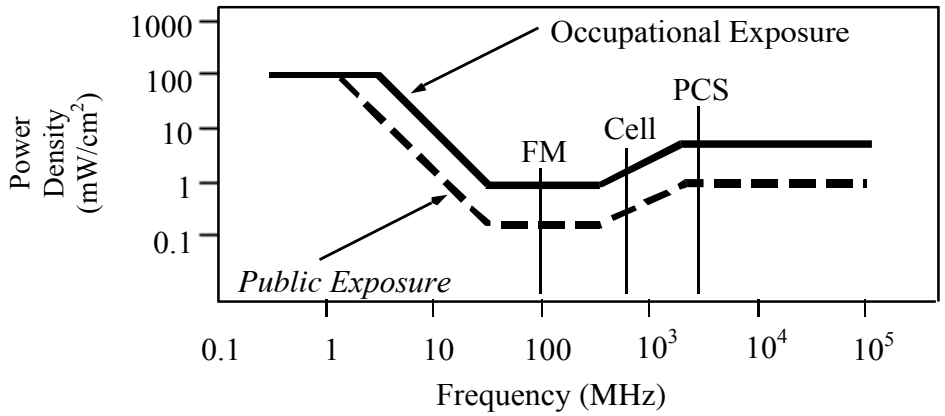

Higher levels are allowed for short periods of time, such that total exposure levels averaged over six or thirty minutes, for occupational or public settings, respectively, do not exceed the limits, and higher levels also are allowed for exposures to small areas, such that the spatially averaged levels do not exceed the limits. However, neither of these allowances is incorporated in the conservative calculation formulas in the FCC Office of Engineering and Technology Bulletin No. 65 (August 1997) for projecting field levels. Hammett & Edison has built those formulas into a proprietary program that calculates, at each location on an arbitrary rectangular grid, the total expected power density from any number of individual radio sources. The program allows for the description of buildings and uneven terrain, if required to obtain more accurate projections.

RFR.CALC™ Calculation Methodology

Assessment by Calculation of Compliance with FCC Exposure Guidelines

The U.S. Congress required (1996 Telecom Act) the Federal Communications Commission ("FCC") to adopt a nationwide human exposure standard to ensure that its licensees do not, cumulatively, have a significant impact on the environment. The maximum permissible exposure limits adopted by the FCC (see Figure 1) apply for continuous exposures from all sources and are intended to provide a prudent margin of safety for all persons, regardless of age, gender, size, or health. Higher levels are allowed for short periods of time, such that total exposure levels averaged over six or thirty minutes, for occupational or public settings, respectively, do not exceed the limits.

Near Field.

Prediction methods have been developed for the near field zone of panel (directional) and whip (omnidirectional) antennas, typical at wireless telecommunications base stations, as well as dish (aperture) antennas, typically used for microwave links. The antenna patterns are not fully formed in the near field at these antennas, and the FCC Office of Engineering and Technology Bulletin No. 65 (August 1997) gives suitable formulas for calculating power density within such zones.

For a panel or whip antenna, power density $S = \frac{180}{\theta_{BW}} \times \frac{0.1 \times P_{net}}{\pi \times D \times h}$, in mW/cm^2,

and for an aperture antenna, maximum power density $S_{max} = \frac{0.1 \times 16 \times \eta \times P_{net}}{\pi \times h^2}$, in mW/cm^2,

where θ_{BW} = half-power beamwidth of the antenna, in degrees, and
P_{net} = net power input to the antenna, in watts,
D = distance from antenna, in meters,
h = aperture height of the antenna, in meters, and
η = aperture efficiency (unitless, typically 0.5-0.8).

The factor of 0.1 in the numerators converts to the desired units of power density.

Far Field.

OET-65 gives this formula for calculating power density in the far field of an individual RF source:

$$\text{power density } S = \frac{2.56 \times 1.64 \times 100 \times RFF^2 \times ERP}{4 \times \pi \times D^2}, \text{ in } mW/cm^2,$$

where ERP = total ERP (all polarizations), in kilowatts,
RFF = relative field factor at the direction to the actual point of calculation, and
D = distance from the center of radiation to the point of calculation, in meters.

The factor of 2.56 accounts for the increase in power density due to ground reflection, assuming a reflection coefficient of 1.6 (1.6 x 1.6 = 2.56). The factor of 1.64 is the gain of a half-wave dipole relative to an isotropic radiator. The factor of 100 in the numerator converts to the desired units of power density. This formula has been built into a proprietary program that calculates, at each location on an arbitrary rectangular grid, the total expected power density from any number of individual radiation sources. The program also allows for the description of uneven terrain in the vicinity, to obtain more accurate projections.